thermoscientific

Thermo Scientific M Series Centrifuges

Instruction Manual

50174321-c • 03 / 2026

ThermoFisher SCIENTIFIC

Contents

Preface 5

Intended Use 5

IVD-MD 5

General Use 5

Signal Words and Symbols 6

Symbols used on Centrifuge and Accessories 6

Symbols used in the Instruction Manual 7

Safety Instructions 8

---

1. Technical Specifications 13

1. 1. List of Centrifuges 13

1. 2. List of Rotors 15

1. 3. Technical Data 16

1. 4. Directives and Standards 20

1. 5. Mains Supply 23

1. 6. Refrigerants 24

1. 7. Rotor Specifications 25

1. 7. 1. 24 x 1.5/2.0 mL Rotor 25

1. 7. 2. Dual Row 18 x 2.0/0.5 mL Rotor 27

1. 7. 3. 36 x 0.5 mL Rotor 29

1. 7. 4. 10 x 5 mL Rotor 31

1. 7. 5. PCR 8 x 8 Rotor 33

1. 7. 6. PCR 4 x 8 Rotor 35

1. 7. 7. Hematocrit Rotor 37

---

2. Transport and Set Up 39

2. 1. Unpacking 39

Items Supplied 39

2. 2. Location 40

2. 3. Transporting 42

2. 4. Mains Connection 43

3. Operation 44
3. 1. Control Panel 44
3. 2. Power on / off 45
3. 2. 1. To power on the centrifuge. 45
3. 2. 2. To power off the centrifuge 45
3. 2. 3. Audible Alarm 45
3. 3. Open / Close the Centrifuge Lid. 46
3. 4. How to Operate a Rotor 47
3. 4. 1. How to install a rotor 47
3. 4. 2. How to remove a rotor 48
3. 4. 3. Rotor Lid 49
3. 4. 4. Load the Rotor 51
RCF Value Explained 53
3. 4. 5. Filling the Hematocrit Capillaries 54
3. 5. Entering Centrifugation Parameters 55
3. 5. 1. Selecting Speed or RCF-Value. 55
3. 5. 2. Pre-selecting Speed 55
3. 5. 3. Pre-selecting the RCF-Value 56
3. 5. 4. Pre-selecting Run Time 56
3. 5. 5. Pre-selecting Temperature 57
3. 5. 6. Pre-Tempering the Centrifugation Chamber. 58
3. 5. 7. Changing the Settings During the Run. 58
3. 6. Centrifugation. 59
Starting Centrifugation 59
Stopping Centrifugation 60
3. 7. Short-term Centrifugation. 60
3. 8. Aerosol-tight Applications. 61
Basic Principles 61
Replacing Seals 62
Fill Level 62
Quick Test. 63

4. Maintenance and Care 64
4. 1. Cleaning Intervals. 64
4. 2. Basics 64
4. 3. Cleaning 65
Cleaning the Filter Unit. 66
4. 4. Disinfection 67
4. 5. Decontamination 67
4. 6. Autoclaving 68
4. 7. Replace the Hematocrit Sealing. 68
4. 8. How to Deal with Broken Hematocrit Capillary Tubes. . . 69
4. 9. Service. 69
4. 10. Lifetime 70
4. 11. Shipping. 70
4. 12. Storage 70
4. 13. Disposal. 71

5. Troubleshooting. 72
5. 1. Mechanical Emergency Lid Release 72
5. 2. Ice Formation 73
5. 3. Troubleshooting by Guide 73
5. 3. 1. Information for the Customer Service 76

6. Chemical Compatibility 77

Preface

Intended Use

IVD-MD

The centrifuge is intended for the separation of liquid human specimens, such as blood, collected in centrifugation vessels.

The centrifuge is used in in-vitro diagnostic processes to support the collection of information about diseases and other physiological or pathological states, such as immunological or hematological screening (e.g. measurement of free hemoglobulin).

The semi-automated centrifuge is intended to be used in medical laboratories by trained personal.

General Use

The centrifuge is designed to seperate sample mixtures of different densities like chemicals, environmental samples or other non-human body samples.

Signal Words and Symbols

Signal Word	Degree of Hazard
WARNING	Indicates a hazardous situation that, if not avoided, could result in death or serious injury.
CAUTION	Indicates a hazardous situation that, if not avoided, could result in minor or moderate injury.
NOTICE	Indicates information considered important, but not hazard-related.

Symbols used on Centrifuge and Accessories

Observe the information contained in this instruction manual to keep yourself and your environment safe.

	General hazard		Danger of cuts
	Biological hazard		Hazard caused by cold surface
	Hazard caused by hot surface		Information on the hazard in the manual
	Hazard caused by flammable materials		Disconnect mains plug
	Refer to instruction manual		Use by date
	Direction of rotation		Date of manufacture
	Manufacturer	LOT	Batch code
IVD	In vitro diagnostic medical device	SN	Serial number
REF	Catalogue number		Consult instruction manual
	Single use only	CE	CE conformity
	Separate collection for EEE	UK CA	UK Conformity Assessed Mark

	Conformity to Chinese environmental law

Symbols used in the Instruction Manual

Observe the information contained in the instruction manual to keep yourself and your environment safe.

	General hazard		Electrical hazard
	Biological hazard		Danger of cuts
	Hazard caused by flammable materials		Hazard caused by hot surface.
	Indicates information considered important, but not hazard-related.	[→ 🗎 7]	This is a cross reference. The arrow stands for “refer to” or “see”. The symbol in the middle stands for “page”. The page number is stated at the end. In this example it is page 7. Page numbers are placed at each bottom of a page.

Safety Instructions

WARNING

Not following these safety instructions can lead to hazardous situations that, if not avoided, could result in death or serious injury.

Observe the safety instructions.

The centrifuge is to be used for its intended use only. Improper use can cause damages, contamination, and injuries with fatal consequences.

The centrifuge must be operated by trained personnel only.

It is the obligation of the operator to make sure that the proper protective clothing is used. Mind the "Laboratory Biosafety Manual" of the World Health Organization (WHO) and the regulations in your country.

Keep a safety zone of minimum 30 cm around the centrifuge. Persons and hazardous substances must be kept out of this safety zone while centrifuging.

Do not modify the centrifuge and its accessories in any unauthorized way.

Do not operate a centrifuge if its housing is open or incomplete.

WARNING

Risk of damage due to incorrect power supply.

Make sure that the centrifuge is plugged only into a power outlet that has been properly grounded.

Do not use a power supply cable with inadequate rating.

WARNING

Risk from handling hazardous substances.

When working with corrosive samples (salt solutions, acids, bases), the accessories and the centrifuge have to be cleaned thoroughly.

Extreme care should be taken with highly corrosive substances that can cause damage and impair the mechanical stability of the rotor. These should only be centrifuged in fully sealed tubes.

The centrifuge is neither inert nor protected against explosion. Never use the centrifuge in an explosion-prone environment.

Do not centrifuge toxic or radioactive materials or any pathogenic micro-organisms without suitable safety precautions.

When centrifuging any hazardous materials mind the "Laboratory Biosafety Manual" of the World Health Organization (WHO) and any local regulations. When centrifuging microbiological samples from the Risk Group II (according to the "Laboratory Biosafety Manual" of the World Health Organization (WHO)), aerosol-tight biological seals have to be used. Visit the Internet page of the World Health Organization (www.who.int) for the "Laboratory Biosafety Manual". For materials in a higher risk group, extra safety measures must be taken.

If toxins or pathogenic substances have contaminated the centrifuge or its parts, appropriate disinfection measures have to be taken. [→ 67]

If a hazardous situation occurs, turn off the power supply to the centrifuge and leave the area immediately.

Make sure to use the proper accessories for your applications to avoid hazardous contamination.

In any case of severe mechanical failure, such as rotor or bottle crash, personnel should be aware that the centrifuge is not aerosol-tight. Leave the room immediately.

Contact the customer service. Aerosols need time to settle before opening the centrifuge after a crash. Ventilated centrifuges bear a higher risk of being contaminated after a crash than refrigerated centrifuges.

WARNING

Risk of contamination.

Potential contaminations will not remain in the centrifuge while the device is operated.

Take appropriate protection measures to prevent spread of contaminations.

A centrifuge is no closed containment.

WARNING

Damage to health from centrifuging explosive or flammable materials or substances.

Do not centrifuge explosive or flammable materials or substances.

WARNING

Serious injuries can occur if you touch a spinning rotor with your hands or tools.

A rotor can still be spinning after a power failure occurs.

Do not open the centrifuge before the rotor has stopped spinning. Do not touch a spinning rotor. Open the centrifuge only if the rotor has stopped spinning.

Never use your hands or tools to stop a spinning rotor.

The emergency lid release may be used in emergencies only to recover the samples from the centrifuge, for example, during a power failure. [→ 72]

WARNING

Risk of injuries from defective lid spring

Make sure that the centrifuge lid can be opened completely and that it will stay in its position.

Regularly check the lid springs for their proper function.

Do not operate the centrifuge with a defective lid spring.

Let an authorized service technician replace defective lid springs.

WARNING

Risk of overheating

To avoid overheating of the centrifuge make sure that all ventilation openings are unobstructed at all times.

WARNING

The centrifuge contains a flammable refrigerant under high pressure

Do not tamper with the refrigerant circuits.

To avoid damage to or leaks in the refrigerant circuits and minimize the risk of possible ignition and fire:

- Handle and move the centrifuge with utmost care.
- Do not use heating devices, sharp or pointed tools or other mechanical devices to accelerate the defrosting process, other than those recommended by the manufacturer. Allow the ice to melt and clean up the residual liquid.
- Have the refrigerant circuits serviced by authorized service personnel and defective component parts replaced with original spare parts.
- In any case of severe mechanical failure, such as rotor or bottle crash, leave the room immediately. Flammable refrigerant might have leaked into the room. Ventilate the room.

CAUTION

Safety can be impaired by wrong loading and worn accessories.

Always make sure that the load is as equally distributed as possible.

Do not use rotors and accessories which show any signs of corrosion or cracks.

Contact customer service for further information.

Do not operate the centrifuge with an unbalanced rotor. Use only rotors which have been loaded properly.

Never overload the rotor.

Make sure that rotors and accessories are installed properly before operating the centrifuge. [→ 47]

CAUTION

Physical harm caused by ignoring operative basics.

Operate the centrifuge with a properly installed rotor.

Do not move the centrifuge while it is running.

Do not lean on the centrifuge.

Do not put anything on the centrifuge while it is running.

The centrifuge housing is not to be opened by the operator.

CAUTION

Due to air friction sample integrity may be affected.

The temperature of the rotor may rise significantly while the centrifuge is spinning.

Ventilated units lead to a heat up of the rotor above the ambient temperature.

Refrigerated units can have a deviation from displayed and set temperature to the sample temperature.

Make sure the centrifuge temperature control capabilities meet your application specification. If necessary make a test run.

NOTICE

Protection capability may be impaired due to using unapproved accessories.

Use only accessories for this centrifuge which have been approved by Thermo Fisher Scientific. [→ 15]

Exceptions to this rule are commercially available glass or plastic centrifuge labware, provided they have been designed to fit in the rotor or the adapter cavities and are approved for the speed or the RCF value of the rotor.

NOTICE

To shut down the centrifuge:

Press the "Stop" key. Turn off the centrifuge at the main switch. Pull out the power supply plug. In an emergency disconnect the power supply.

Make sure that the main switch and power supply plug can be accessed easily when setting up the centrifuge. The grounded electrical socket should be well accessible and located outside of the safety zone.

NOTICE

Maximum sound pressure of centrifuge operates below the hazard threshold of ≤70 dB(A) above a reference sound pressure of 20 µPa.

NOTICE

In case of serious incident:

Report any case of serious incident that has occured in relation to the device to the manufacturer and your local authorities.

1. Technical Specifications

1. 1. List of Centrifuges

Centrifuge	Article No.	Voltage	IVD-MD
Thermo Scientific MT 17, ventilated, includes 24 x 1.5/2.0 mL rotor with ClickSeal biocontainment lid	75002570	120 V ±10 %, 60 Hz	
	75002571	220-230 V ±10 %, 50 / 60 Hz	
	75002576*	120 V ±10 %, 60 Hz	✓
	75002577	220-230 V ±10 %, 50 / 60 Hz	✓
Thermo Scientific MT 17, ventilated, includes hematocrit rotor	75002578	220-230 V ±10 %, 50 / 60 Hz	✓
	75002598*	120 V ±10 %, 50 / 60 Hz	✓
Thermo Scientific MTR 17, refrigerated, includes 24 x 1.5/2.0 mL rotor with ClickSeal biocontainment lid	75002582*	120 V ±10 %, 60 Hz	
	75002583	220-230 V ±10 %, 50 / 60 Hz	
	75002588*	120 V ±10 %, 60 Hz	✓
	75002589	220-230 V ±10 %, 50 / 60 Hz	✓
	75002597*	220-230 V ±10 %, 50 / 60 Hz	✓
Thermo Scientific MT 21, ventilated, includes 24 x 1.5/2.0 mL rotor with ClickSeal biocontainment lid	75002573	120 V ±10 %, 60 Hz	
	75002574	220-230 V ±10 %, 50 / 60 Hz	
	75002575	100 V ±10 %, 50 / 60 Hz	
	75002579*	120 V ±10 %, 60 Hz	✓
	75002580	220-230 V ±10 %, 50 / 60 Hz	✓
	75002581	100 V ±10 %, 50 / 60 Hz	✓

Centrifuge	Article No.	Voltage	IVD-MD
Thermo Scientific MTR 21, refrigerated, includes 24 x 1.5/2.0 mL rotor with ClickSeal biocontainment lid	75002585*	120 V ±10 %, 60 Hz	
	75002586	220-230 V ±10 %, 50 / 60 Hz	
	75002587	100 V ±10 %, 50 / 60 Hz	
	75002591*	120 V ±10 %, 60 Hz	✓
	75002592	220-230 V ±10 %, 50 / 60 Hz	✓
	75002593	100 V ±10 %, 50 / 60 Hz	✓
	75002599*	220-230 V ±10 %, 50 / 60 Hz	✓

Table 1: List of Centrifuges

*Compliant with US standards for centrifuges

1. 2. List of Rotors

Article No.	Description
75003424	24 x 1.5/2.0 mL rotor with ClickSeal biocontainment lid
75003418	Dual Row 18 x 2.0/0.5 mL rotor with screw-on lid
75003436	36 x 0.5 mL rotor with screw-on lid
75003465	10 x 5 mL rotor with ClickSeal biocontainment lid
75003489	PCR 8 x 8 rotor with screw-on lid
75003440	PCR 4 x 8 rotor with ClickSeal biocontainment lid
75003473	Hematocrit rotor

Table 2: Rotors

1. 3. Technical Data

Thermo Scientific MT 17	
Speed Range (depending on the rotor) RCF Value at max. Speed	300–13300 rpm 17000 x g
Running Time	unlimited
Noise Level at max. Speed	< 54 dB (A) with a 24 x 1.5/2.0 mL rotor (1 m in front of the unit at 1.6 m height)
Maximum Kinetic Energy	1.9 kNm
Average Heat Dissipation	0.15 kW/h
Environmental Conditions	
For Storage and Shipping	Temperature: -10 °C to 55 °C; Humidity 15% to 85%
For Operation	Use in interior spaces Altitudes of up to 3000 m above sea level Temperature: 2 °C to 40 °C Max. relative humidity 80% up to 31 °C; decreasing linearly to 50% relative humidity at 40 °C
Pollution Degree	2
Overvoltage Category	II
IP	20
Dimensions	
Height (open door / closed door) Width Depth	43.5 cm (17.1 in) / 22.5 cm (8.8 in) 24.3 cm (9.5 in) 35.2 cm (13.8 in)
Weight (with rotor)	120 V / 220-230 V: 11 kg (24.2 lbs) 100 V: 12.5 kg (27.5 lbs)

Table 3: Technical Data Thermo Scientific MT 17

Thermo Scientific MT 21	
Speed Range (depending on the rotor) RCF Value at max. Speed	300–14800 rpm 21100 x g
Running Time	unlimited
Noise Level at max. Speed	< 56 dB (A) with a 24 x 1.5/2.0 mL rotor (1 m in front of the unit at 1.6 m height)
Maximum Kinetic Energy	2.37 kNm
Average Heat Dissipation	0.2 kW/h
Environmental Conditions	
For Storage and Shipping	Temperature: -10 °C to 55 °C; Humidity 15% to 85%
For Operation	Use in interior spaces Altitudes of up to 3000 m above sea level Temperature: 2 °C to 40 °C Max. relative humidity 80% up to 31 °C; decreasing linearly to 50% relative humidity at 40 °C
Pollution Degree	2
Overvoltage Category	II
IP	20
Dimensions	
Height (open door / closed door) Width Depth	43.5 cm (17.1 in) / 22.5 cm (8.8 in) 24.3 cm (9.5 in) 35.2 cm (13.8 in)
Weight (with rotor)	120 V / 220-230 V: 11 kg (24.2 lbs) 100 V: 12.5 kg (27.5 lbs)

Table 4: Technical Data Thermo Scientific MT 21

Thermo Scientific MTR 17	
Speed Range (depending on the rotor) RCF Value at max. Speed	300–13300 rpm 17000 x g
Running Time	unlimited
Noise Level at max. Speed	< 48 dB (A) with a 24 x 1.5/2.0 mL rotor (1 m in front of the unit at 1.6 m height)
Maximum Kinetic Energy	1.9 kNm
Average Heat Dissipation	0.2 kW/h
Temperature Setting Range	-9 °C to 40 °C
Environmental Conditions	
For Storage and Shipping	Temperature: -10 °C to 55 °C; Humidity 15% to 85%
For Operation	Use in interior spaces Altitudes of up to 3000 m above sea level Temperature: 2 °C to 40 °C Max. relative humidity 80% up to 31 °C; decreasing linearly to 50% relative humidity at 40 °C
Pollution Degree	2
Overvoltage Category	II
IP	20
Dimensions	
Height (open door / closed door) Width Depth	56.5 cm (22.2 in) / 33.0 cm (12.9 in) 29.0 cm (11.4 in) 44.0 cm (17.3 in)
Weight (with rotor)	120 V / 220-230 V: 24.5 kg (54.0 lbs) 100 V: 26.0 kg (57.3 lbs)

Table 5: Technical Data Thermo Scientific MTR 17

Thermo Scientific MTR 21	
Speed Range (depending on the rotor) RCF Value at max. Speed	300–14 800 rpm 21 100 x g
Running Time	unlimited
Noise Level at max. Speed	< 48 dB (A) with a 24 x 1.5/2.0 mL rotor (1 m in front of the unit at 1.6 m height)
Maximum Kinetic Energy	2.37 kNm
Average Heat Dissipation	0.25 kW/h
Temperature Setting Range	-9 °C to 40 °C
Environmental Conditions	
For Storage and Shipping	Temperature: -10 °C to 55 °C; Humidity 15% to 85%
For Operation	Use in interior spaces Altitudes of up to 3 000 m above sea level Temperature: 2 °C to 40 °C Max. relative humidity 80% up to 31 °C; decreasing linearly to 50% relative humidity at 40 °C
Pollution Degree	2
Overvoltage Category	II
IP	20
Dimensions	
Height (open door / closed door) Width Depth	56.5 cm (22.2 in) / 33.0 cm (12.9 in) 29.0 cm (11.4 in) 44.0 cm (17.3 in)
Weight (with rotor)	220-230 V: 25.5 kg (56.2 lbs) 120 V: 24.5 kg (54.0 lbs) 100 V: 26.0 kg (57.3 lbs)

Table 6: Technical Data Thermo Scientific MTR 21

1. 4. Directives and Standards

IVD-MD

Region	Directive	Standards
Europe 220-230 V, 50 / 60 Hz	(EU) 2017/746 In Vitro Diagnostics Medical Devices 2014/30/EC Electromagnetic Compatibility (EMC) 2011/65/EC RoHS and all applicable amendments and additions Directive on the Restriction of the use of certain Hazardous Substances in electrical and electronic equipment	EN 61010-1 EN 61010-2-020 EN 61010-2-011 EN 61010-2-101 EN 61326-2-6 EN 61326-1 Class B EN ISO 14971 ISO 13485
North America 220-230 V, 50 / 60 Hz 120 V, 60 Hz	FDA listed Product code JQC centrifuges for clinical use Device class 1	ANSI/UL 61010-1 UL 61010-2-020 UL 61010-2-011 UL 61010-2-101 FCC Part 15 ICES-001 EN ISO 14971 ISO 13485
Japan 100 V, 50 / 60 Hz		IEC 61010-1 IEC 61010-2-020 IEC 61010-2-011 IEC 61010-2-101 EN 61326-2-6 IEC 61326-1 Class B EN ISO 14971 ISO 13485
China 220-230 V, 50 / 60 Hz	NMPA listed	

Table 7: Directives and Standards - IVD-MD

NOTICE: This equipment has been tested and found to comply with the limits for a Class B digital device, pursuant to part 15 of the FCC Rules. These limits are designed to provide reasonable protection against harmful interference in a residential installation. This equipment generates, uses and can radiate radio frequency energy and, if not installed and used in accordance with the instructions, may cause harmful interference to radio communications. However, there is no guarantee that interference will not occur in a particular installation. If this equipment does cause

harmful interference to radio or television reception, which can be determined by turning the equipment off and on, the user is encouraged to try to correct the interference by one or more of the following measures:

- Reorient or relocate the receiving antenna.
- Increase the separation between the equipment and receiver.
- Connect the equipment into an outlet on a circuit different from that to which the receiver is connected.
- Consult the dealer or an experienced radio/TV technician for help.

General Use

Region	Directive	Standards
Europe 220-230 V, 50 / 60 Hz	2006/42/EC Machinery Directive 2014/30/EC Electromagnetic Compatibility (EMC) 2011/65/EC RoHS and all applicable amendments and additions Directive on the Restriction of the use of certain Hazardous Substances in electrical and electronic equipment	EN 61010-1 EN 61010-2-020 EN 61010-2-011 EN 61326-1 Class B
North America 220-230 V, 50 / 60 Hz 120 V, 60 Hz	FDA listed Product code JQC centrifuges for clinical use Device class 1	ANSI/UL 61010-1 UL 61010-2-020 UL 61010-2-011 FCC Part 15
Japan 100 V, 50 / 60 Hz		EN 61010-1 EN 61010-2-020 EN 61010-2-011 EN 61326-1 Class B
China 220-230 V, 50 / 60 Hz	Product Quality Act	

Table 8: Directives and Standards - General Use

NOTICE: This equipment has been tested and found to comply with the limits for a Class B digital device, pursuant to part 15 of the FCC Rules. These limits are designed to provide reasonable protection against harmful interference in a residential installation. This equipment generates, uses and can radiate radio frequency energy and, if not installed and used in accordance with the instructions, may cause harmful interference to radio communications. However, there is no guarantee that interference will not occur in a particular installation. If this equipment does cause harmful interference to radio or television reception, which can be determined by turning the equipment off and on, the user is encouraged to try to correct the interference by one or more of the following measures:

- Reorient or relocate the receiving antenna.
- Increase the separation between the equipment and receiver.
- Connect the equipment into an outlet on a circuit different from that to which the receiver is connected.
- Consult the dealer or an experienced radio/TV technician for help.

1. 5. Mains Supply

Article No.	Centrifuge	Voltage	Frequ-ency	Rated Current	Power Consumption	Equipment Fuse	Building Fuse
75002570	MT 17	120	60	2.6 A	180 W	6.3 AT	15 AT
75002571	MT 17	220-230	50/60	1.4 A	180 W	4 AT	16 AT
75002576	MT 17 IVD-MD	120	60	2.6 A	180 W	6.3 AT	15 AT
75002577	MT 17 IVD-MD	220-230	50/60	1.4 A	180 W	4 AT	16 AT
75002578	MT 17 IVD-MD	220-230	50/60	1.4 A	180 W	4 AT	16 AT
75002598	MT 17 IVD-MD	120	50/60	2.6 A	180 W	6.3 AT	15 AT
75002582	MTR 17	120	60	3.6 A	250 W	10 AT	15 AT
75002583	MTR 17	220-230	50/60	1.6 A	250 W	10 AT	16 AT
75002588	MTR 17 IVD-MD	120	60	3.6 A	250 W	10 AT	15 AT
75002589	MTR 17 IVD-MD	220-230	50/60	1.6 A	250 W	10 AT	16 AT
75002597	MTR 17 IVD-MD	220-230	50/60	1.6 A	250 W	10 AT	15 AT
75002573	MT 21	120	60	3.4 A	220 W	6.3 AT	15 AT
75002574	MT 21	220-230	50/60	1.7 A	230 W	4 AT	16 AT
75002575	MT 21	100	50/60	3.9 A	230 W	6.3 AT	15 AT
75002579	MT 21 IVD-MD	120	60	3.4 A	220 W	6.3 AT	15 AT
75002580	MT 21 IVD-MD	220-230	50/60	1.7 A	230 W	4 AT	16 AT
75002581	MT 21 IVD-MD	100	50/60	3.9 A	230 W	6.3 AT	15 AT
75002585	MTR 21	120	60	4.0 A	300 W	10 AT	15 AT
75002586	MTR 21	220-230	50/60	1.8 A	300 W	10 AT	16 AT
75002587	MTR 21	100	50/60	4.5 A	300 W	10 AT	15 AT
75002591	MTR 21 IVD-MD	120	60	4.0 A	300 W	10 AT	15 AT

Article No.	Centrifuge	Voltage	Frequ-ency	Rated Current	Power Consumption	Equipment Fuse	Building Fuse
75002592	MTR 21 IVD-MD	220-230	50/60	1.8 A	300 W	10 AT	16 AT
75002593	MTR 21 IVD-MD	100	50/60	4.5 A	300 W	10 AT	15 AT
75002599	MTR 21 IVD-MD	220-230	50/60	1.8 A	300 W	10 AT	15 AT

Table 9: Mains Supply

1. 6. Refrigerants

Article No.	Centrifuge	Refrigerant	Quantity	Low and high side max. pressure	GWP	CO2e
75002582	MTR 17	R-600a	0.08 kg	7 / 12 bar	3	0.264 kg
75002583	MTR 17	R-600a	0.08 kg	7 / 12 bar	3	0.264 kg
75002588	MTR 17 IVD-MD	R-600a	0.08 kg	7 / 12 bar	3	0.264 kg
75002589	MTR 17 IVD-MD	R-600a	0.08 kg	7 / 12 bar	3	0.264 kg
75002597	MTR 17 IVD-MD	R-600a	0.08 kg	7 / 12 bar	3	0.264 kg
75002585	MTR 21	R-600a	0.08 kg	7 / 12 bar	3	0.264 kg
75002586	MTR 21	R-600a	0.08 kg	7 / 12 bar	3	0.264 kg
75002587	MTR 21	R-600a	0.08 kg	7 / 12 bar	3	0.264 kg
75002591	MTR 21 IVD-MD	R-600a	0.08 kg	7 / 12 bar	3	0.264 kg
75002592	MTR 21 IVD-MD	R-600a	0.08 kg	7 / 12 bar	3	0.264 kg
75002593	MTR 21 IVD-MD	R-600a	0.08 kg	7 / 12 bar	3	0.264 kg
75002599	MTR 21 IVD-MD	R-600a	0.08 kg	7 / 12 bar	3	0.264 kg

Contains greenhouse gases in a hermetically sealed system.

Table 10: Refrigerants

1. 7. Rotor Specifications

1. 7. 1. 24 x 1.5/2.0 mL Rotor

Items Supplied

Item	Article No.	Quantity
24 x 1.5/2.0 mL Rotor	75003424	1
O-Ring Grease	76003500	1

Table 11: Items Supplied 24 x 1.5/2.0 mL Rotor

General Technical Data

Maximum Permissible Load	24 x 4 g
Maximum Number of Cycles	50 000
Radius (max. / min.)	8.6 cm / 5.1 cm
Angle	45°
Aerosol-tight	Yes
Max. Autoclaving Temperature	121 °C

Table 12: General Technical Data 24 x 1.5/2.0 mL Rotor

Rotor Performance Data

17 Centrifuges – 24 x 1.5/2.0 mL Rotor		
Voltage	**220-230 V**	**120 V**
Maximum Speed	13 300	13 300
Maximum RCF-Value	17 000	17 000
Acceleration / Braking Time	11 s / 12 s	11 s / 12 s
Sample Heating at max speed, 23 °C ambient temperature, 60 min running time	33 °C	33 °C

21 Centrifuges – 24 x 1.5/2.0 mL Rotor		
Voltage	**220-230 V**	**120 V**
Maximum Speed	14 800	14 800
Maximum RCF-Value	21 100	21 100
Acceleration / Braking Time	13 s / 13 s	13 s / 13 s
Sample Heating at max speed, 23 °C ambient temperature, 60 min running time	36 °C	36 °C

17R Centrifuges – 24 x 1.5/2.0 mL Rotor		
Voltage	**220-230 V**	**120 V**
Maximum Speed	13300	13300
Maximum RCF-Value	17000	17000
Acceleration / Braking Time	10 s / 12 s	10 s / 12 s
Min. Temperature at max. Speed, Ambient Temperature of 23 °C	≤ 0 °C	≤ 0 °C

21R Centrifuges – 24 x 1.5/2.0 mL Rotor		
Voltage	**220-230 V**	**120 V**
Maximum Speed	14800	14800
Maximum RCF-Value	21100	21100
Acceleration / Braking Time	12 s / 13 s	12 s / 13 s
Min. Temperature at max. Speed, Ambient Temperature of 23 °C	2 °C	2 °C

Table 13: 24 x 1.5/2.0 mL Rotor Performance Data

Accessories

Description	Article No.	Rotor Capacity	Max. Tube Dimensions
0.5/0.6 mL microliter tube adapters, pack of 24	76003252	24 x 0.5/0.6	7 x 32
0.25/0.4 mL microliter tube adapters, pack of 24	76003251	24 x 0.25/0.4	6 x 24
0.2 mL PCR tube adapters, pack of 24	76003250	24 x 0.2	6 x 24
ClickSeal biocontainment lid	75003410	-	-
Replacement O-ring set for ClickSeal lid – 75003410	75003405	-	-

Table 14: Accessories 24 x 1.5/2.0 mL Rotor

1. 7. 2. Dual Row 18 x 2.0/0.5 mL Rotor

Items Supplied

Item	Article No.	Quantity
Dual Row 18 x 2.0/0.5 mL Rotor	75003418	1

Table 15: Items Supplied Dual Row 18 x 2.0/0.5 mL Rotor

General Technical Data

Maximum Permissible Load	8 x 4 g + 8 x 0.5 g
Maximum Number of Cycles	50000
Radius (max. / min.)	8.5 cm / 4.8 cm
Angle	45°
Aerosol-tight	No
Max. Autoclaving Temperature	121 °C

Table 16: General Technical Data Dual Row 18 x 2.0/0.5 mL Rotor

Rotor Performance Data

17 Centrifuges – Dual Row 18 x 2.0/0.5 mL Rotor		
Voltage	**220-230 V**	**120 V**
Maximum Speed	13300	13300
Maximum RCF-Value	16800	16800
Acceleration / Braking Time	11 s / 12 s	11 s / 12 s
Sample Heating at max speed, 23 °C ambient temperature, 60 min running time	33 °C	33 °C

21 Centrifuges – Dual Row 18 x 2.0/0.5 mL Rotor		
Voltage	**220-230 V**	**120 V**
Maximum Speed	14800	14800
Maximum RCF-Value	20800	20800
Acceleration / Braking Time	12 s / 13 s	12 s / 13 s
Sample Heating at max speed, 23 °C ambient temperature, 60 min running time	36 °C	36 °C

17R Centrifuges – Dual Row 18 x 2.0/0.5 mL Rotor		
Voltage	**220-230 V**	**120 V**
Maximum Speed	13300	13300
Maximum RCF-Value	16800	16800
Acceleration / Braking Time	10 s / 12 s	10 s / 12 s
Min. Temperature at max. Speed, Ambient Temperature of 23 °C	≤ 0 °C	≤ 0 °C

21R Centrifuges – Dual Row 18 x 2.0/0.5 mL Rotor		
Voltage	**220-230 V**	**120 V**
Maximum Speed	14800	14800
Maximum RCF-Value	20800	20800
Acceleration / Braking Time	11 s / 13 s	11 s / 13 s
Min. Temperature at max. Speed, Ambient Temperature of 23 °C	2 °C	2 °C

Table 17: Dual Row 18 x 2.0/0.5 mL Rotor Performance Data

Accessories

Description	Article No.	Rotor Capacity	Max. Tube Dimensions
Screw-on lid	75003406	-	-

Table 18: Accessories Dual Row 18 x 2.0/0.5 mL Rotor

1. 7. 3. 36 x 0.5 mL Rotor

Items Supplied

Item	Article No.	Quantity
36 x 0.5 mL Rotor	75003436	1

Table 19: Items Supplied 36 x 0.5 mL Rotor

General Technical Data

Maximum Permissible Load	36 x 0.5 g
Maximum Number of Cycles	50000
Radius (max. / min.)	7.9 cm / 5.0 cm
Angle	45°
Aerosol-tight	No
Max. Autoclaving Temperature	121 °C

Table 20: General Technical Data 36 x 0.5 mL Rotor

Rotor Performance Data

17 Centrifuges – 36 x 0.5 mL Rotor		
Voltage	**220-230 V**	**120 V**
Maximum Speed	13300	13300
Maximum RCF-Value	15600	15600
Acceleration / Braking Time	9 s / 10 s	9 s / 10 s
Sample Heating at max speed, 23 °C ambient temperature, 60 min running time	31 °C	31 °C

21 Centrifuges – 36 x 0.5 mL Rotor		
Voltage	**220-230 V**	**120 V**
Maximum Speed	14800	14800
Maximum RCF-Value	19300	19300
Acceleration / Braking Time	10 s / 11 s	10 s / 11 s
Sample Heating at max speed, 23 °C ambient temperature, 60 min running time	34 °C	34 °C

17R Centrifuges – 36 x 0.5 mL Rotor		
Voltage	**220-230 V**	**120 V**
Maximum Speed	13300	13300
Maximum RCF-Value	15600	15600
Acceleration / Braking Time	8 s / 10 s	8 s / 10 s
Min. Temperature at max. Speed, Ambient Temperature of 23 °C	≤ 0 °C	≤ 0 °C

21R Centrifuges – 36 x 0.5 mL Rotor		
Voltage	**220-230 V**	**120 V**
Maximum Speed	14800	14800
Maximum RCF-Value	19300	19300
Acceleration / Braking Time	9 s / 11 s	9 s / 11 s
Min. Temperature at max. Speed, Ambient Temperature of 23 °C	2 °C	2 °C

Table 21: 36 x 0.5 mL Rotor Performance Data

Accessories

Description	Article No.	Rotor Capacity	Max. Tube Dimensions
Screw-on lid	75003406	-	-

Table 22: Accessories 36 x 0.5 mL Rotor

1. 7. 4. 10 x 5 mL Rotor

Items Supplied

Item	Article No.	Quantity
10 x 5 mL Rotor	75003465	1
O-Ring Grease	76003500	1
O-Ring Set	75003405	1

Table 23: Items Supplied 10 x 5 mL Rotor

General Technical Data

Maximum Permissible Load	10 x 9 g
Maximum Number of Cycles	50000
Radius (max. / min.)	8.3 cm / 4.2 cm
Angle	41°
Aerosol-tight	No
Max. Autoclaving Temperature	121 °C

Table 24: General Technical Data 10 x 5 mL Rotor

Rotor Performance Data

17 Centrifuges – 10 x 5 mL Rotor		
Voltage	**220-230 V**	**120 V**
Maximum Speed	13300	13300
Maximum RCF-Value	16414	16414
Acceleration / Braking Time	11 s / 12 s	11 s / 12 s
Sample Heating at max speed, 23 °C ambient temperature, 60 min running time	33 °C	33 °C

21 Centrifuges – 10 x 5 mL Rotor		
Voltage	**220-230 V**	**120 V**
Maximum Speed	14800	14800
Maximum RCF-Value	20326	20326
Acceleration / Braking Time	13 s / 13 s	13 s / 13 s
Sample Heating at max speed, 23 °C ambient temperature, 60 min running time	36 °C	36 °C

17R Centrifuges – 10 x 5 mL Rotor		
Voltage	**220-230 V**	**120 V**
Maximum Speed	13300	13300
Maximum RCF-Value	16414	16414
Acceleration / Braking Time	10 s / 12 s	10 s / 12 s
Min. Temperature at max. Speed, Ambient Temperature of 23 °C	≤ 0 °C	≤ 0 °C

21R Centrifuges – 10 x 5 mL Rotor		
Voltage	**220-230 V**	**120 V**
Maximum Speed	14800	14800
Maximum RCF-Value	20326	20326
Acceleration / Braking Time	12 s / 13 s	12 s / 13 s
Min. Temperature at max. Speed, Ambient Temperature of 23 °C	2 °C	2 °C

Table 25: 10 x 5 mL Rotor Performance Data

Accessories

Description	Article No.	Rotor Capacity	Max. Tube Dimensions
ClickSeal biocontainment lid	75003410	-	-
Replacement O-ring set for ClickSeal lid – 75003410	75003405	-	-

Table 26: Accessories 10 x 5 mL Rotor

1. 7. 5. PCR 8 x 8 Rotor

Items Supplied

Item	Article No.	Quantity
PCR 8 x 8 Rotor	75003489	1

Table 27: Items Supplied PCR 8 x8 Rotor

General Technical Data

Maximum Permissible Load	8 x 4 g (64 x 0.5 g)
Maximum Number of Cycles	50 000
Radius (max. / min.)	7.0 cm / 4.4 cm
Angle	60°
Aerosol-tight	No
Max. Autoclaving Temperature	121 °C

Table 28: General Technical Data PCR 8 x 8 Rotor

Rotor Performance Data

17 Centrifuges – PCR 8 x 8 Rotor		
Voltage	**220-230 V**	**120 V**
Maximum Speed	13 300	13 300
Maximum RCF-Value	13 800	13 800
Acceleration / Braking Time	7 s / 8 s	7 s / 8 s
Sample Heating at max speed, 23 °C ambient temperature, 60 min running time	31 °C	31 °C

21 Centrifuges – PCR 8 x 8 Rotor		
Voltage	**220-230 V**	**120 V**
Maximum Speed	14 800	14 800
Maximum RCF-Value	17 100	17 100
Acceleration / Braking Time	8 s / 9 s	8 s / 9 s
Sample Heating at max speed, 23 °C ambient temperature, 60 min running time	32 °C	32 °C

17R Centrifuges – PCR 8 x 8 Rotor		
Voltage	**220-230 V**	**120 V**
Maximum Speed	13300	13300
Maximum RCF-Value	13800	13800
Acceleration / Braking Time	6 s / 8 s	6 s / 8 s
Min. Temperature at max. Speed, Ambient Temperature of 23 °C	≤ 0 °C	≤ 0 °C

21R Centrifuges – PCR 8 x 8 Rotor		
Voltage	**220-230 V**	**120 V**
Maximum Speed	14800	14800
Maximum RCF-Value	17100	17100
Acceleration / Braking Time	7 s / 9 s	7 s / 9 s
Min. Temperature at max. Speed, Ambient Temperature of 23 °C	≤ 0 °C	≤ 0 °C

Table 29: PCR 8 x 8 Rotor Performance Data

Accessories

Description	Article No.	Rotor Capacity	Max. Tube Dimensions
Screw-on lid	75003406	-	-

Table 30: Accessories PCR 8 x 8 Rotor

1. 7. 6. PCR 4 x 8 Rotor

Items Supplied

Item	Article No.	Quantity
PCR 4 x 8 Rotor	75003440	1

Table 31: Items Supplied PCR 4 x 8 Rotor

General Technical Data

Maximum Permissible Load	4 x 4 g (32 x 0.2 g)
Maximum Number of Cycles	50 000
Radius (max. / min.)	6.6 cm / 4.7 cm
Angle	45°
Aerosol-tight	Yes
Max. Autoclaving Temperature	121 °C

Table 32: General Technical Data PCR 4 x 8 Rotor

Rotor Performance Data

17 Centrifuges – PCR 4 x 8 Rotor		
Voltage	**220-230 V**	**120 V**
Maximum Speed	13 300	13 300
Maximum RCF-Value	13 100	13 100
Acceleration / Braking Time	10 s / 11 s	10 s / 11 s
Sample Heating at max speed, 23 °C ambient temperature, 60 min running time	31 °C	31 °C

21 Centrifuges – PCR 4 x 8 Rotor		
Voltage	**220-230 V**	**120 V**
Maximum Speed	14 800	14 800
Maximum RCF-Value	16 200	16 200
Acceleration / Braking Time	12 s / 13 s	12 s / 13 s
Sample Heating at max speed, 23 °C ambient temperature, 60 min running time	33 °C	33 °C

17R Centrifuges – PCR 4 x 8 Rotor		
Voltage	**220-230 V**	**120 V**
Maximum Speed	13300	13300
Maximum RCF-Value	13100	13100
Acceleration / Braking Time	9 s / 12 s	9 s / 12 s
Min. Temperature at max. Speed, Ambient Temperature of 23 °C	≤ 0 °C	≤ 0 °C

21R Centrifuges – PCR 4 x 8 Rotor		
Voltage	**220-230 V**	**120 V**
Maximum Speed	14800	14800
Maximum RCF-Value	16200	16200
Acceleration / Braking Time	11 s / 13 s	11 s / 13 s
Min. Temperature at max. Speed, Ambient Temperature of 23 °C	≤ 0 °C	≤ 0 °C

Table 33: PCR 4 x 8 Rotor Performance Data

Accessories

Description	Article No.	Rotor Capacity	Max. Tube Dimensions
ClickSeal biocontainment lid	75003410	-	-
Replacement O-ring set for ClickSeal lid – 75003410	75003405	-	-

Table 34: Accessories PCR 4 x 8 Rotor

1. 7. 7. Hematocrit Rotor

Items Supplied

Item	Article No.	Quantity
Hematocrit rotor	75003473	1
Anti-corrosion oil	70009824	1

Table 35: Items Supplied with Hematocrit Rotor

Accessories

Description	Article No.
Capillaries (pack of 100)	76000923
Sealing putty	75000964
Replacement rubber bands (set of 5)	75003030

Table 36: Hematocrit Rotor Accessories

General Technical Data

Maximum permissible load	24 x 0.2 g
Maximum number of cycles	50 000
Radius (min. / max.)	2.0 cm / 8.5 cm
Angle	90°
Aerosol-tight	No
Max. autoclaving temperature	134 °C

Table 37: Hematocrit Rotor General Technical Data

Rotor Performance Data

17 Centrifuges – Hematocrit Rotor		
Voltage	**220-230 V**	**120 V**
Maximum speed	13 300	13 300
Maximum RCF value	16 810	16 810
Acceleration / braking time	10 s / 11 s	10 s / 11 s
Sample heating at max speed, 23 °C ambient temperature, 60 min running time	34 °C	34 °C

21 Centrifuges – Hematocrit Rotor		
Voltage	**220-230 V**	**120 V**
Maximum speed	14 800	14 800
Maximum RCF value	20815	20815

21 Centrifuges – Hematocrit Rotor		
Voltage	**220-230 V**	**120 V**
Acceleration / braking time	11 s / 12 s	11 s / 12 s
Sample heating at max speed, 23 °C ambient temperature, 60 min running time	35 °C	35 °C

17R Centrifuges – Hematocrit Rotor		
Voltage	**220-230 V**	**120 V**
Maximum speed	13300	13300
Maximum RCF value	16810	16810
Acceleration / braking time	9 s / 11 s	9 s / 11 s
Min. temperature at max. speed, ambient temperature of 23 °C	≤ 0 °C	≤ 0 °C

21R Centrifuges – Hematocrit Rotor		
Voltage	**220-230 V**	**120 V**
Maximum speed	14800	14800
Maximum RCF value	20815	20815
Acceleration / braking time	10 s / 12 s	10 s / 12 s
Min. temperature at max. speed, ambient temperature of 23 °C	2 °C	2 °C

2. Transport and Set Up

The shipping carton should be inspected upon delivery. When received, carefully examine for any shipping damage before unpacking. If damage is discovered, the delivering carrier should specify and sign for the damage on your copy of the delivery receipt.

Open the carton carefully making certain that all parts are accounted for before packaging materials are discarded. [→ 🗎 39]

After unpacking, if damage is found, report it to the carrier and request a damage inspection.

Important: Failure to request an inspection of damage within a few days after receipt of shipment absolves the carrier from any liability for damage. You must call for a damage inspection.

NOTICE It is your responsibility to make sure that the centrifuge is set up properly.

2. 1. Unpacking

Use the packing list when unpacking to verify that the complete unit has been received. Do not discard packing materials until all is accounted for.

Items Supplied

Item	Quantity
Centrifuge	1
Power Supply Cable	1
Rotor	1
Allen Wrench	1
Manual print en	1
Manuals on USB	1

If any items are missing, contact Thermo Fisher Scientific.

2. 2. Location

Operate the centrifuge only indoors.

The set up location must meet these requirements:

- Keep a safety zone of minimum 30 cm around the centrifuge. [→ 🗎 41]

  Persons and hazardous substances must be kept out of this safety zone while centrifuging.

  Centrifuges cause vibrations. Do not store sensitive devices or dangerous objects or substances in the safety zone.

  WARNING Risk of impact. The centrifuge can crush objects and persons in a radius of 30 cm while spinning. Keep a safety zone of 30 cm around the centrifuge for safe operation. Make sure that no one is in the safety zone while the centrifuge is spinning.

- The supporting structure must meet these requirements:
  - » Be stable, solid, rigid and free of resonance.
  - » Be free from grease and dust.
  - » Be applicable for horizontal set up of the centrifuge.
    It is not allowed to put anything under the centrifuge to compensate for an uneven surface.
    Do not operate the centrifuge on carts or stand-alone shelving that could move during operation or is inadequately sized for the centrifuge.
  - » Be able to hold the weight of the centrifuge.

- The centrifuge is not equipped with any means for leveling. The supporting structure must be suitably level to allow proper set up.

  CAUTION If you do not level the centrifuge, the centrifuge can crash because of imbalance. If you move the centrifuge, you must level it again. Do not move the centrifuge with a rotor attached to the drive shaft because damage can occur to the drive. Do not put anything below the centrifuge feet to level the centrifuge.

- Do not expose the centrifuge, accessories and samples to heat and strong sunlight.

  CAUTION UV rays reduce the stability of plastics. Do not subject the centrifuge, rotors and plastic accessories to direct sunlight.

- The set up location must be well ventilated at all times.

  WARNING Ensure that all ventilation openings of the centrifuge remain unobstructed at all times.

- The main switch and power supply plug must be easily accessible at all times. The grounded electrical socket should be well accessible and located outside of the safety zone.

  WARNING The wall socket must not be installed in the safety zone.

- The room must have a minimum room volume of 16.25 m^3.

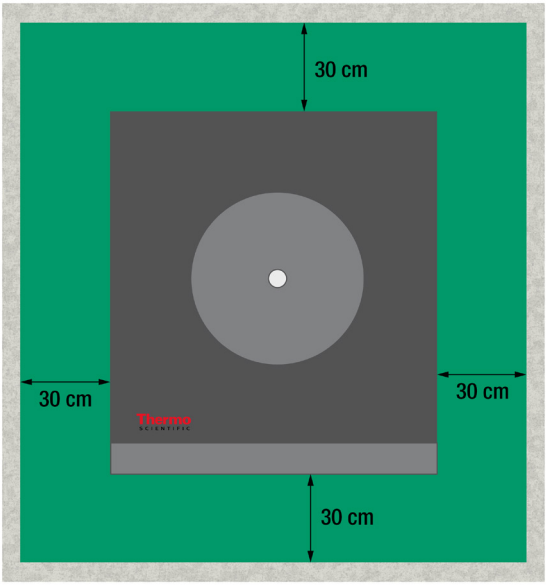

Figure 1: Safety Zone

2. 3. Transporting

Before transporting a centrifuge make sure that

- the power supply cable is unplugged and removed from the centrifuge.
- the rotor is removed.

  CAUTION Damage to centrifuge or drive shaft due to movement of an installed rotor. Always remove the rotor before you transport the centrifuge.

- the centrifuge door is closed.

  CAUTION Hands can be squeezed by an open centrifuge door. Always close the centrifuge door before you transport the centrifuge.

Before transporting a rotor make sure that

- all components, like adapters and buckets are removed to prevent dropping damage.
- the centrifuge is lifted at both sides and not at the front or back.

  WARNING Always lift the centrifuge on both sides. Never lift the centrifuge by its front or back.

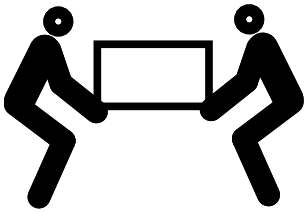

Figure 2: Lifting the Centrifuge at Both Sides

2. 4. Mains Connection

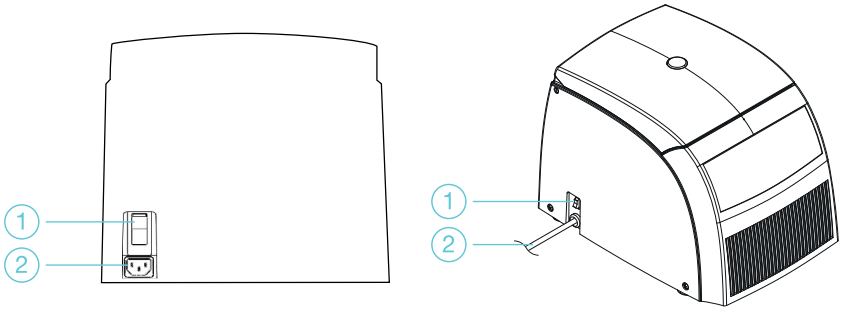

① Power Supply Switch; ② Mains Connection

Figure 3: Mains Connection: MT 17 / 21 (left); MTR 17 / 21 (right)

1. Turn off the power supply switch.
2. Make sure that the power supply cable specification agrees with the safety standards of your country.
3. Make sure that the voltage and frequency are the same as the figures on the nameplate
4. Make sure that the power supply cable is plugged in properly.

NOTICE	Connect the centrifuge into grounded electrical sockets only.

NOTICE	Rated current is doubled during acceleration. Mind this load on the power supply line.

3. Operation

3. 1. Control Panel

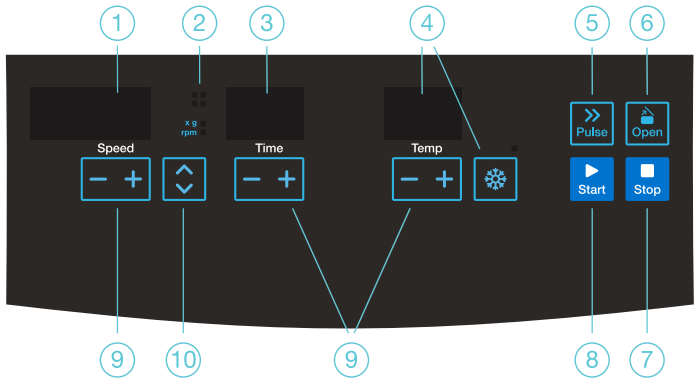

No.	Item	Description
①	Speed / RCF Value	The speed (rpm) or RCF value (x g) is displayed here.
②	Display Mode	Use the **TOGGLE** button to change the display mode. (speed / RCF value, sample / chamber temperature, run time counter from start or preset speed on).
③	Running Time	The running time is displayed here.
④	Temperature (SNOWFLAKE)	The temperature is displayed here. You can pre-temper the centrifugation chamber and the empty rotor before the centrifugation run starts using the **SNOWFLAKE** button. NOTICE This function is only available on refrigerated centrifuges.
⑤	PULSE	Press **PULSE** to immediately start the centrifugation run and accelerate up to the maximal permissible end speed (depending on the used rotor). Releasing **PULSE** initiates a stopping process according to the set acceleration and braking curve.
⑥	OPEN	Press **OPEN** to activate the automatic door release (possible only if device is powered on and if the rotor is fully stopped).
⑦	STOP	Press **STOP** to manually end the centrifugation run.
⑧	START	Press **START** to start a centrifugation run or to accept the current settings.
⑨	PLUS / MINUS	Use the **MINUS / PLUS** buttons − + to set the parameter in the field directly above.
⑩	TOGGLE	Use the **TOGGLE** button to change the display mode.

Figure 4: Control Panel Overview

3. 2. Power on / off

3. 2. 1. To power on the centrifuge

Push on the mains switch of the centrifuge to “1” to power it on.

The centrifuge shows the actual value in the display. Speed and Time show 0. The display shows the current temperature of the sample.

3. 2. 2. To power off the centrifuge

Set the mains switch of the centrifuge to “0” to power it off.

The centrifuge is now in standby. To shut the centrifuge down and disconnect it from the power supply, you must pull out the power supply plug.

NOTICE The centrifuge is equipped with a special switch for balancing potential voltage discrepancies in the power grid. After pressing the mains switch the display therefore may still flash up to 10 seconds.

3. 2. 3. Audible Alarm

Error

Accompanying all error messages, a warning signal is given out.

Press any key to silence the warning signal.

End of Run

By default there is an acoustic signal at the end of any centrifugation run. To switch off this signal proceed as follows:

1. Keep the **TOGGLE** button pressed when you turn on the centrifuge.

   The display shows:

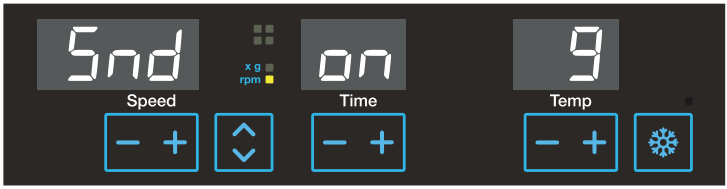

   or

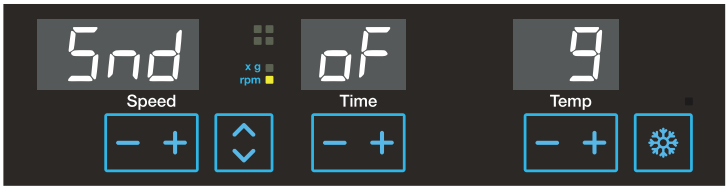

2. Press the **MINUS / PLUS** button − + under the **TIME** display in the middle.

   The acoustic signal is turned on or off.
3. Press **STOP** to confirm the pre-selected value.

3. 3. Open / Close the Centrifuge Lid

To open the centrifuge lid

Press the Open button on the control panel.

The display shows the following:

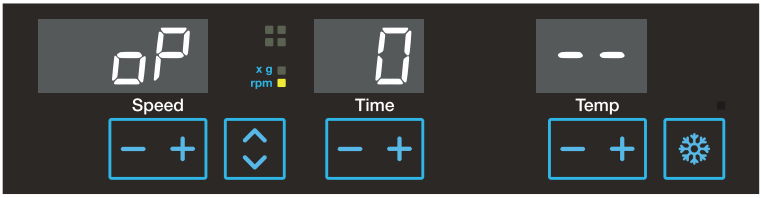

To close the centrifuge lid

Close the centrifuge lid by pressing down on it lightly in the middle or on both sides. The locking mechanism engages to close the lid safely. The lid should audibly click into place.

Double-check whether the locking mechanism has engaged properly.

WARNING Do not use the mechanical emergency door release as regular procedure to open the centrifuge. Use the mechanical emergency door release only if a malfunction or power failure occurs and only when you have made sure that the rotor has stopped spinning. [→ 72]

3. 4. How to Operate a Rotor

Operate the centrifuge only with rotors and accessories from the list with approved rotors. [→ 🗎 15]

3. 4. 1. How to install a rotor

1. Press the **Open** button control panel to open the lid of the centrifuge.
2. Hold the rotor over the centrifuge spindle. The two bars in the labeling on the upper side of the rotor (a) must be aligned with the retaining pin (b) of the centrifuge spindle.

a.

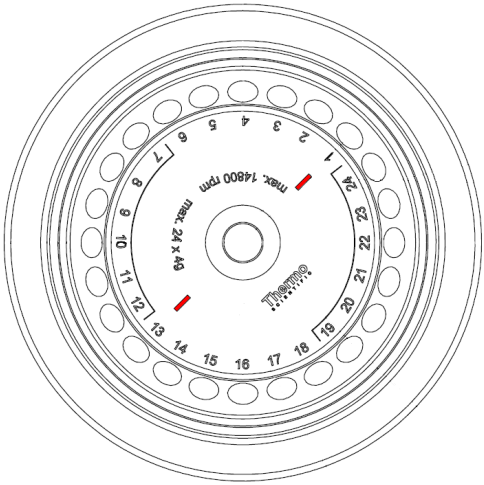

b.

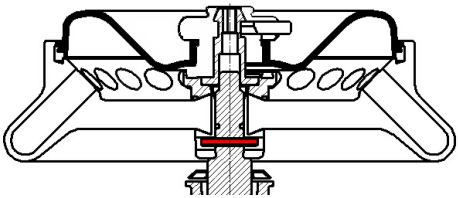

3. Let the rotor slide down slowly.
4. Insert the Allen wrench into the centrifuge spindle and tighten clockwise. Hold the rotor with the other hand.
5. Make sure that the rotor is properly installed by lifting it slightly on the handle. If the rotor can be pulled up, then it must be re-clamped to the drive shaft.
6. Make sure the rotor spins freely by turning it manually.

WARNING If the rotor cannot be properly locked in place after several attempts, then the rotor fixation is defective and you are not permitted to operate the rotor. Check for any damage to the rotor: Damaged rotors must not be used. Keep the drive shaft area of the rotor clear of objects.

CAUTION Do not force the rotor onto the drive shaft. If the rotor is very light, it may be necessary to carefully press it onto the drive shaft with little force.

CAUTION Make sure that the rotor is properly locked on the drive shaft before each use by pulling at its handle.

CAUTION Risk of burning on hot surfaces. When installing or removing a rotor you may accidentally touch the spindle or motor surface. The centrifuge spindle and the motor may be hot (>55 °C). Be aware of this risk and proceed carefully when you change a rotor after a run or wait until the motor has cooled down.

Before installing a rotor

- Remove any dust, foreign objects or residue from the chamber, if necessary.
- Inspect the thread and O-ring of the motor spindle. Both parts must be clean and undamaged.

CAUTION Do not install the rotor when the temperature difference between the shaft and the rotor lock is >20 °C. Otherwise the rotor might jam.

3. 4. 2. How to remove a rotor

1. Press the **Open** button on the control panel to open the lid of the centrifuge.
2. If necessary, remove samples, adapters or buckets.
3. Unscrew the rotor fixation with the Allen wrench.
4. Grasp the rotor in the middle. Pull the rotor directly upwards and remove it from the centrifuge spindle. Make sure not to tilt the rotor while doing this.

CAUTION Be careful when you change a rotor after a run. The centrifuge spindle and motor may be hot (>55 °C) and burn your skin.

Aerosol-tight Rotors

When using an aerosol tight lid the rotor can be removed with the lid closed. This is to protect you and the samples.

NOTICE Make sure that all components are safely fixed before you carry a rotor.

3. 4. 3. Rotor Lid

CAUTION Unapproved or incorrectly combined rotors and accessories can cause serious damage to the centrifuge.

Rotors with ClickSeal™ Biocontainment Lid

Open

The rotor lid is retained by the integrated central rotor nut.

Unlock and lift the lid by keeping the red unlocking button pressed at the handle

Close

1. Put the rotor lid on the rotor nut.
2. Push the rotor lid down until you see and hear the lock click.

If the lid does not close at all or only by force, make sure that the sealing rings are correctly in position. Clean and lubricate them if necessary. Examine the lid mechanism for dirt and correct functionality. Replace damaged parts immediately.

Rotors with Screw-on Lid

Open

The rotor lid is screwed to the rotor body.

1. Turn the rotor handle counter-clockwise to remove the lid.
2. Lift the rotor lid.

Close

The rotor lid is screwed to the rotor body.

1. Put the rotor lid onto the rotor.
2. Turn the rotor handle clockwise to install the lid.

Operating the Rotor without the Rotor Lid

If you plan to operate the rotor without the lid you must remove the seals.

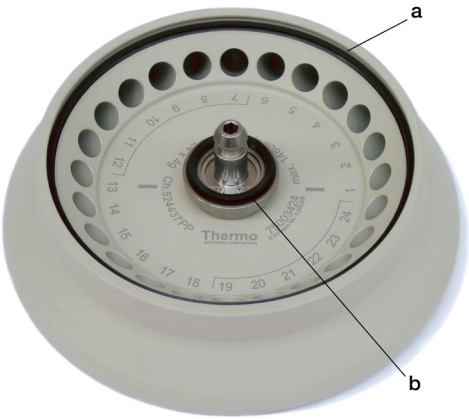

a = Large seal in outer groove of rotor body; b = Small seal in groove of rotor collar

Figure 5: Rotor Lid Seals

CAUTION Loose parts may damage the centrifuge. When operating the rotor without the lid the seals are not fixed in their position and can damage the centrifuge.

Tube Caps

Always close the tube caps. Open caps can tear loose during operation and cause damage.

✕ = open cap; ✓ = closed cap

Figure 6: Tube caps

3. 4. 4. Load the Rotor

Balance Loading

Load the compartments evenly. Balance opposite loads.

Correct Loading

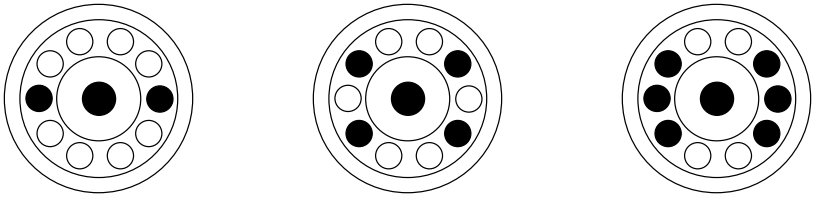

Incorrect Loading

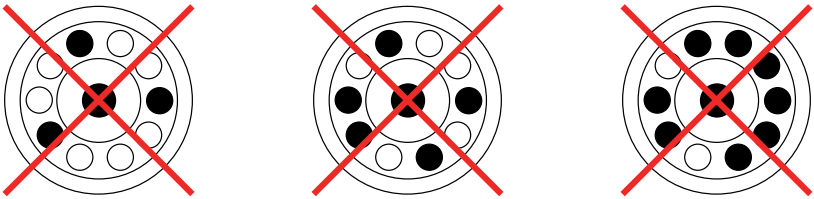

Before Loading a Rotor

Before loading a Rotor

1. Inspect the rotor and all accessory parts for damage, such as cracks, scratches, or traces of corrosion.
2. Inspect the centrifugation chamber and drive shaft for damage, such as cracks, scratches, or traces of corrosion.
3. Check the suitability of the rotor and other used accessories against the Chemical Compatibility Chart. [→ 🗎 77]
4. Make sure that:
   - » tubes fit in the rotor.
   - » the tubes do not touch the rotor lid.

CAUTION Incorrect loading can lead to damage. Always load the rotor symmetrically to avoid imbalance, noisy spinning and possible damage.

CAUTION When using an aerosol-tight rotor lid, verify that the sample tubes don't interfere with the rotor lid and don't compromise its sealing efficiency.

CAUTION Tubes may open and break during centrifugation because they do not fit properly to the cavities. Contamination may occur. Make sure that the length and width of the tubes are fitting into cavities. Do not use tubes that are too short or too thick for the cavities.

Maximum Loading

Each rotor is designed to run with its maximum load at maximum speed. The safety system of the centrifuge requires that the rotor is not overloaded.

The rotors are designed to work with substance mixtures with a density of up to 1.2 g/ml. If the admissible maximum load is exceeded, the following steps need to be taken:

- Reduce the fill level.
- Reduce the speed.

Use the following formula or the table given for each rotor to calculate the maximum admissible speed for a given load. [→ 🗎 25]

$$n_{adm} = n_{max} \sqrt{\frac{w_{max}}{w_{app}}}$$

n_{adm} = admissible maximum application speed

n_{max} = maximum rated speed

w_{max} = maximum rated load

w_{app} = applied load

RCF Value Explained

The relative centrifugal force (RCF) is given as a multiple of the force of gravity (g). It is a unitless numerical value which is used to compare the separation or sedimentation capacity of various centrifuges, since it is independent of the type of device. Only the centrifuging radius and the speed are used for calculation:

$$RCF = 11,18 \times \left(\frac{n}{1000}\right)^2 \times r$$

r = centrifuging radius in cm

n = rotational speed in rpm

The maximum RCF value is related to the maximum radius of the tube opening.

Remember that this value is reduced depending on the tubes, buckets and adapters used.

This can be accounted for in the calculation above if required.

Use of Tubes and Consumables

Make sure that the tubes and bottles used in the centrifuge are:

- rated to or above the selected RCF to be spun at,
- never used not below their minimum fill volume and never above their maximum fill volume,
- not used above their design life (age or number of runs),
- undamaged,
- fitting well into the cavities.

Please refer to manufacturers' data sheets for further information.

3. 4. 5. Filling the Hematocrit Capillaries

1. Shake up the blood sample before filling the capillary.
2. Hold the capillary slanted with one end into the blood sample.
3. Fill the hematocrit capillary (76000923) with a blood column of approximately 65 mm.
4. Make sure that the second opening remains dry.
5. Close the dry end of the hematocrit capillary with sealing putty (75000964). To do this, push the hematocrit capillary vertically into the sealing putty until its rim touches the sealing putty's plate.

Tilt it slightly and pull the hematocrit capillary carefully out of the putty. Make sure that the capillaries are well sealed with the sealing putty.

WARNING

Broken glass may cause loss of sample, incorrect results, risk of cuts and infections. Handle the hematocrit capillaries with care and, if necessary, use protective equipment. Use only the specified hematocrit capillaries. [→ 37]

CAUTION

Incorrect results will be generated if capillary is filled with pre-separated fraction of blood. Before filling the capillaries shake up the blood sample.

NOTICE

Capillaries are for single use. They are to be disposed after use. Follow regulations for proper disposal.

3. 5. Entering Centrifugation Parameters

NOTICE Due to limited display digits there is a need to round the values. The direct comparison between the two values speed and RCF is therefore restricted.

3. 5. 1. Selecting Speed or RCF-Value

Press the TOGGLE button to switch between the two modes.

- When the lower indicator is lit the display shows the speed.

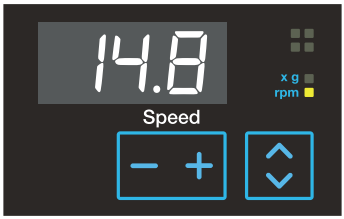

- When the upper indicator is lit the display shows the RCF value.

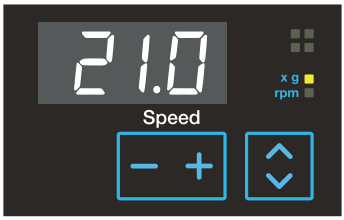

3. 5. 2. Pre-selecting Speed

1. Enter the desired value by pressing the **MINUS / PLUS** button repeatedly until the desired value shows. You can adjust the speed in 100 rpm increments.
2. Press **START** to confirm the pre-selected value.

   If you do not press any button, the display flashes for a few seconds. The new preselected value is now stored and the display shows the actual value.

NOTICE The centrifuge speed can be set to a minimum of 300 rpm. The maximum speed depends on the centrifuge variant.

NOTICE Avoid if possible speed ranges close to natural resonances of the system. Runs at resonance speeds may cause vibration and have an adverse effect on the quality of separation.

3. 5. 3. Pre-selecting the RCF-Value

1. Enter the desired value by pressing the **MINUS / PLUS** button − + repeatedly, until the desired value shows. You can adjust the RCF pre-selected value in steps of 100 x g.
2. Press **START** to confirm the pre-selected value.

   If you do not press any button, the display flashes for a few seconds. The new preselected value is now stored and the display shows the actual value.

NOTICE The RCF value can be set to a minimum of 100 x g. The maximum speed depends on the centrifuge variant. The displayed RCF value is always corresponding to the maximum of centrifuge radius of the 24 x 1.5 / 2.0 mL Rotor (75003424). [→ 🗎 53]

NOTICE Avoid if possible speed ranges close to natural resonances of the system. Runs at resonance speeds may cause vibration and have an adverse effect on the quality of separation.

3. 5. 4. Pre-selecting Run Time

NOTICE You can select a run time between 1 and 99 min or continuous operation.

1. Enter the desired value by pressing the **MINUS / PLUS** button − + below the display in the middle repeatedly, until the desired value shows. You can adjust the run time in steps of 1 min.
2. Press **START** to confirm the pre-selected value.

   If you do not press any key, the display flashes for a few seconds. The new preselected value is now stored and the display shows the actual value.

Continuous Operation

1. Press the **MINUS / PLUS** button − + until **hd** is shown.

2. During continuous operation, the centrifuge will continue running until you stop it manually with **STOP**.

CAUTION Please note that the lifetime of rotor tubes is limited, in particular if the tubes are made of plastics materials. Continuous operation (extended use) may cause damage to them.

3. 5. 5. Pre-selecting Temperature

You can determine the sample temperature in °C. Proceed as follows:

1. Enter the desired value by pressing the **MINUS / PLUS** button − + under the right display repeatedly, until the desired value shows. You increase or decrease the temperature in steps of 1 °C.
2. Press **START** to confirm the pre-selected value.

   If you do not press any button, the display flashes for a few seconds. The new preselected value is now stored and the display shows the actual value.

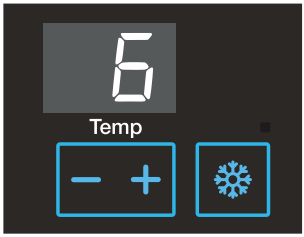

3. Close the centrifuge lid.
4. Restart the centrifuge.

   The refrigeration starts operating if the pre-selected temperature is below the current temperature of the rotor chamber.

3. 5. 6. Pre-Tempering the Centrifugation Chamber

Refrigerated centrifuges allow for pre-tempering, that is pre-warming or pre-cooling, the centrifugation chamber and the empty rotor before the centrifugation run starts. If necessary pre-temper your samples using proper equipment. The centrifuge is not intended to be used to pre-temper your samples.

NOTICE Ventilated models cannot pre-temper the centrifugation chamber.

In order to pre-temp the centrifuge and the unloaded rotor proceed as follows:

1. Press the **SNOWFLAKE** button.

   An indicator above the **SNOWFLAKE** button indicates operation at the activated pre-temp function.

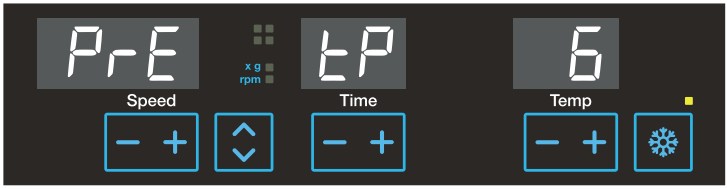

2. Enter the desired value by pressing the **MINUS / PLUS** buttons − + under the right display repeatedly, until the desired value shows. You increase or decrease the temperature in steps of 1 °C.
3. Press **START**.

   The rotor will be operated at optimal speed.

NOTICE When you press a different key than **START** you will quit the pre-temp function.

NOTICE If you wish to change the temperature of your samples, please consider that the time required for temperature adjustment is prolonged. For critical applications you should take other precautions to ensure that the desired temperature is actually reached and maintained.

3. 5. 7. Changing the Settings During the Run

You can change the settings during the run as follows:

1. Press one of the three **MINUS / PLUS** button − + in the control panel.

   The current value will switch into the pre-selecting value mode.
2. Enter the new value as described above.
3. Press START.
4. The value is set and used immediately.

3. 6. Centrifugation

WARNING

Damage to health from centrifuging explosive or flammable materials or substances. Do not centrifuge explosive or flammable materials or substances.

CAUTION

Due to air friction sample integrity may be affected.

The temperature of the rotor may rise significantly while the centrifuge is spinning. Ventilated units lead to a heat up of the rotor above the ambient temperature. Refrigerated units can have a deviation from displayed and set temperature to the sample temperature.

Make sure the centrifuge temperature control capabilities meet your application specification. If necessary make a test run.

Mind the safety zone of minimum 30 cm around the centrifuge. [→ 🗎 41]

Persons and hazardous substances must be kept out of this safety zone while centrifuging.

Once the main switch has been turned on, the rotor has been properly installed, the setpoints have been set as explained in the previous section, and the centrifuge lid has been closed, you are ready to start.

Starting Centrifugation

Press START on the control panel. The centrifuge accelerates to the preset speed with the time display active.

The circulating indicators in the left display represent the spinning rotor.

The run display begins to count down from the pre-selected value. If the remaining run time is less then 1 minute, the remaining time is given in seconds.

In continuous operation **hd**, the time display counts up. [→ 🗎 57]

The elapsed run time is initially displayed in seconds. After one minute the display changes every minute.

Stopping Centrifugation

With Pre-selected Run Time

If run time has been pre-selected, all you have to do is wait until the centrifuge terminates the run automatically.

As soon as the speed drops to zero, the message **END** will appear in the display. By pressing **OPEN**, you can open the lid and remove the samples.

You can also stop centrifugation manually at any time by pressing **STOP**.

Continuous Operation

If you select continuous operation, you will have to stop the centrifuge manually. [→ 🗎 57]

1. Press **STOP** on the control panel.
2. When the message **END** appears in the display, press **OPEN** to open the centrifuge lid and remove the samples.

3. 7. Short-term Centrifugation

For short-term centrifuging, the centrifuge has a PULSE function.

When you press and hold **PULSE**, spinning will start and continue until you release the key.

The centrifuge accelerates to and brakes at maximum power. The pre-selected value is ignored.

NOTICE The centrifuge accelerates to maximum speed.

The run time is initially displayed in seconds. After one minute the display changes every minute.

After a short-term centrifugation run the set values are restored.

3. 8. Aerosol-tight Applications

Basic Principles

- Make sure that the sample containers are well suited for the desired centrifugation process.
- The temperature in ventilated centrifuges can reach 15 °C above room temperature.

CAUTION

Aerosol-tight rotors and tubes may only be opened in an approved safety workbench when centrifuging dangerous samples. Mind the maximum permissible load.

CAUTION

Be sure to check all seals before starting any aerosol-tight applications.

CAUTION

Prior to each use, the seals in the rotor need to be inspected in order to assure that they are correctly seated and are not worn or damaged. Damaged seals are to be replaced immediately. Replacement seals can be re-ordered as a spare part. [→ 25]

When loading the rotor, ensure that the rotor lid closes securely. Damaged rotor covers are to be replaced immediately.

Replacing Seals

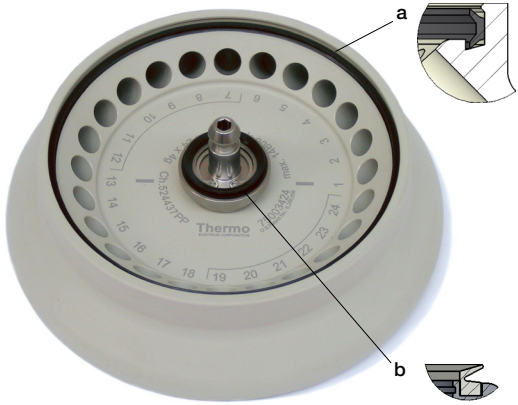

Top detail: Large seal in outer groove of rotor body; bottom detail: small seal in groove of rotor collar

1. Lubricate all seals.
2. Press the large seal in the outer groove of the rotor body (top detail).
3. Press the small seal into the groove of the rotor collar (bottom detail).
4. When loading the rotor, ensure that the rotor lid closes securely.
5. When the rotor lid is damaged or dulled it needs to be replaced.

Fill Level

The tubes are only to be filled to a level which ensures that the sample is unable to reach the top of the tube during centrifugation.

Nominal Volume	Permissible Volume
2.0 ml	1.5 ml
1.5 ml	1.0 ml
others	2/3 of nominal volume

Checking Aerosol Tightness

The aerosol tightness testing of the rotors and buckets depend on the microbiological test process in accordance with the EN 61010-2-020 Appendix AA.

Whether or not a rotor is aerosol-tight depends primarily on proper handling.

Check as needed to make sure your rotor is aerosol-tight.

The careful inspection of the seals and seal surfaces for signs of wear and damage such as cracks, scratches and embrittlement are extremely important.

Aerosol-tight applications are not possible if the lids are open.

Aerosol tightness requires the correct operation when filling the sample vessels and closing the rotor lid.

Quick Test

As a quick test, it is possible to test the aerosol tightness of fixed-angle rotors using the following process:

1. Lubricate all seals lightly.

   Always use the supplied grease when lubricating the seals.
2. Fill the cavities with approx. 10 ml of carbonated mineral water.
3. Close the rotor as explained in the handling instructions.
4. Shake the rotor vigorously using your hands.

   This releases the carbonic acid gas, which is bound in the water, resulting in excess pressure.

   Do not apply pressure to the lid when doing so.

   Leaks can be detected by escaping water or the sound of escaping gas.

   Replace the seals if you detect any leaks. Then repeat the test.
5. Dry the rotor, rotor lid and the cover seal.

CAUTION

The quick test is not suited for validating the aerosol tightness of a rotor. Check the seals and sealing surfaces of the lid thoroughly.

4. Maintenance and Care

4. 1. Cleaning Intervals

For the sake of personal, environmental, and material protection, you must clean and if necessary disinfect the shaker and its accessories on a regular basis.

4. 2. Basics

- Use warm water with a neutral detergent that is suitable for use with the materials. If in doubt contact the manufacturer of the cleaning agent.
- Use a soft cloth for cleaning.
- Never use caustic cleaning agents such as soap suds, phosphoric acid, bleaching solutions or scrubbing powder.
- Remove rotor and clean centrifugation chamber with a small amount of cleaning agent on a clean cloth.
- Use a soft brush without metal bristles to remove stubborn residue.
- Afterwards rinse with a small amount of distilled water and remove any remains with absorbent towels.
- Use only cleaning and disinfecting agents with a pH of 6-8.
- After thoroughly cleaning the rotors, they must be inspected for damage, wear and corrosion.
- Make sure that sealing rings are still smooth, not brittle nor otherwise damaged. Some sealing rings are not autoclavable. Replace brittle or damaged sealing rings immediately. Refer to “Rotor Specifications” on page B-1 for details on sealing rings as spare parts.

CAUTION

Not rated procedures or agents could deteriorate the materials of the centrifuge and lead to malfunction. Refrain from using any other cleaning or decontamination procedure, if you are not entirely sure that the intended procedure is safe for the equipment. Use only cleaning agents that will not damage the equipment. In doubt contact the manufacturer of the cleaning agent. If still in doubt, contact Thermo Fisher Scientific.

CAUTION

Do not run any rotor or accessories with sign of damage. Ensure that the rotor, buckets and accessories are within their expected maximum number of cycles. It is recommend that you have rotors and accessories inspected yearly as part of your routine service to ensure safety.

4. 3. Cleaning

Clean as follows:

1. Clean rotor, buckets and accessories outside of the centrifugation chamber.
2. Separate rotor, buckets, lids, tubes and sealing rings to allow thorough cleaning.
3. Rinse rotor and all accessories with warm water and a neutral detergent that is suitable for use with the materials. If in doubt contact the manufacturer of the cleaning agent.
4. Use a soft brush without metal bristles to remove stubborn residue.
5. Rinse rotor and all accessories with distilled water.
6. Place the rotors on a plastic grate with their cavities pointing down, to enable the cavities to fully drain and dry.
7. Dry all of the rotors and accessories after cleaning with a cloth or in a warm air cabinet at a maximum temperature of 50 °C. If drying boxes are used, the temperature must never exceed 50 °C. Higher temperatures could damage the material and shorten the lifetime of the parts.
8. Inspect the rotor and accessories for signs of damages.
9. After cleaning, treat the entire surface of aluminum parts including the cavities with corrosion protection oil (70009824).

CAUTION

Before using any cleaning methods, users should check with the manufacturer of the cleaning agents that the proposed method will not damage the equipment.

CAUTION

Drive and door lock can be damaged by entering liquids. Do not allow liquids, especially organic solvents, to get on the drive shaft, the drive bearings or the centrifuge door locks. Organic solvents break down the grease in the motor bearing. The drive shaft could lock up.

CAUTION

Cutting injuries.

Do not touch the condenser while cleaning the backside of the centrifuge. Cutting damage can occur if you touch the condenser due to their sharpness.

Cleaning the Filter Unit

Refrigerated centrifuges have a filter unit to protect the cooling device.

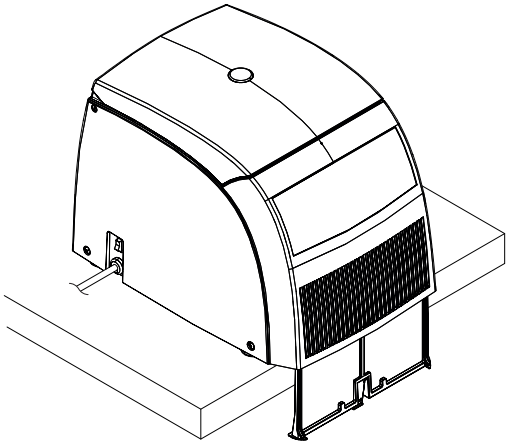

1. Pull the centrifuge to the edge of the table.
2. Pull the clip below the sucking grid and remove the filter unit completely by pulling it down.
3. Remove the cumulated dust with a soft cloth.
4. Inserting the filter again the labeling Front must show to the front of the centrifuge.
5. Push the filter upwards into the slot until the clip locks in the bottom plate.

4. 4. Disinfection

You are responsible that the level of disinfection is achieved according to your requirements.

After disinfection:

1. Rinse the centrifuge and all affected accessories with water.
2. Allow to fully drain and dry.
3. After disinfecting, treat the entire surface of aluminum parts including the cavities with corrosion protection oil (70009824).

WARNING

Do not touch infected parts. Hazardous infection is possible when touching the contaminated rotor and centrifuge parts. Infectious material can get into the centrifuge when a tube breaks or as a result of spills. In case of contamination, make sure that no one is put at risk. Disinfect the affected parts immediately.

CAUTION

Equipment can be damaged by inappropriate disinfection methods or agents. Make sure that the disinfection agent or the method will not damage the equipment. In doubt contact the manufacturer of the disinfection agent. Observe the safety precautions and handling instructions for the disinfection agents used.

4. 5. Decontamination

You are responsible that the level of decontamination is achieved according to your requirements.

After decontamination:

1. Rinse the centrifuge and all affected accessories with water.
2. Allow to fully drain and dry.
3. After decontaminating, treat the entire surface of aluminum parts including the cavities with corrosion protection oil (70009824).

WARNING

Do not touch contaminated parts. Exposure to radiation is possible when touching the contaminated rotor and centrifuge parts. Contaminated material can get into the centrifuge when a tube breaks or as a result of spills. In case of contamination, make sure that no one is put at risk. Decontaminate the affected parts immediately.

CAUTION

Equipment can be damaged by inappropriate decontamination methods or agents. Make sure that the decontamination agent or the method will not damage the equipment. In doubt contact the manufacturer of the decontamination agent. Observe the safety precautions and handling instructions for the decontamination agents used.

4. 6. Autoclaving

Always disassemble all parts before autoclaving, e.g. lids need to be removed before autoclaving a bucket or rotor.

If not stated otherwise on the parts themselves, all parts can be autoclaved at 121 °C for 20 min. Only exception is the hematocrit rotor at 134 °C for 20 min. [→ 🗎 37]

Make sure that the necessary sterility is achieved according to your requirements.

After autoclaving, treat the entire surface of aluminum parts including the cavities with corrosion protection oil (70009824).

⚠ **CAUTION**	Never exceed the permitted temperature and duration when autoclaving.

NOTICE	No chemical additives are permitted in the steam.

4. 7. Replace the Hematocrit Sealing

1. Remove the old sealing.
2. Form the rubber band to a ring. Make sure, that the rubber band is not twisted.
3. Place the touching ends into the rotor groove. Make sure, that they are placed between two capillary slots.
4. Press the rubber band completely into the groove, avoiding creases or waves.

① Touching ends

Figure 7: Replace Sealing

NOTICE To extend the useful lifetime of the rubber band, shift the rubber band as soon as there are pressure marks from the capillaries on it. Make sure that the touching ends are always placed between two capillary slots.

4. 8. How to Deal with Broken Hematocrit Capillary Tubes

1. Remove the lid of the Hematocrit Rotor carefully.
2. Remove the larger pieces of the capillary tubes with tweezers.
3. Remove the rotor.
4. Remove the sealing slowly and carefully with the tweezers.
5. Clean and disinfect the rotor as described below.
6. Place a new sealing.

WARNING

Infectious material can get into the centrifuge when a tube breaks or as a result of spills. Keep in mind the risk of infection when touching the rotor and take all necessary precautions.

Broken capillary tubes have sharp edges and are a risk of injury.

4. 9. Service

Thermo Fisher Scientific recommends having the centrifuge and accessories serviced once a year by an authorized service technician. The service technician checks the following:

- electrical equipment and connections
- suitability of set-up site
- centrifuge lid lock and safety system
- rotor
- fixation of rotor and drive shaft of the centrifuge
- protective casing

Before service, centrifuge and rotors should be thoroughly cleaned and decontaminated to ensure full and safe inspection can be completed.

Thermo Fisher Scientific offers inspection and service contracts for this work. Any necessary repairs are performed for free during the warranty period and afterwards for a charge. That is only valid if the centrifuge has only been maintained by an authorized Thermo Fisher Scientific service technician.

A validation of the centrifuge is recommended and can be ordered from customer service.

4. 10. Lifetime

The centrifuge is specified for a lifetime of 10 years. Decommissioning the centrifuge is suggested when this limit is reached.

The lifetime of rotors, buckets and lids is based on cycles and specified individually for each rotor. [→ 🗎 25]

Other accessories are not limited by a specific lifetime and need only be replaced when damaged or worn.

4. 11. Shipping

Before shipping the centrifuge:

- The centrifuge must be clean and decontaminated.
- You must confirm the decontamination with a decontamination certificate.

WARNING Before shipping the centrifuge and accessories you must clean and, if necessary, disinfect or decontaminate the full system. If you are not sure, consult with Thermo Fisher Scientific customer service.

4. 12. Storage

- Before storing the centrifuge and the accessories it must be clean and if necessary disinfected and decontaminated.

  Centrifuge, rotors, buckets and accessories have to be fully dry before storage.
- Keep the centrifuge in a clean, dry and dust-free location.
- Do not store the centrifuge in direct sunlight.

WARNING When you remove the centrifuge and accessories from use, clean and if necessary disinfect or decontaminate the full system. If you are not sure speak to the Thermo Fisher Scientific customer service.

4. 13. Disposal

For the disposal of the centrifuge mind the regulations in your country. Contact the Thermo Fisher Scientific Customer Service for the disposal of the centrifuge. For contact information check the backpage of this manual or visit www.thermofisher.com/centrifuge

For the countries of the European Union the disposal is regulated by the European Union's Waste Electrical & Electronic Equipment (WEEE) Directive 2012/19/EC.

Mind the information on transport and shipping. [→ 🗎 42] [→ 🗎 70]

WARNING

When removing the centrifuge and accessories from use for disposal you have to clean and if necessary disinfect or decontaminate the entire system. In doubt contact the Thermo Fisher Scientific customer service.

5. Troubleshooting

5. 1. Mechanical Emergency Lid Release

During a power failure, you will not be able to open the centrifuge lid with the regular electric lid release. A mechanical override is provided to allow sample recovery in the case of an emergency. However, this should be used only in emergencies and **after the rotor has come to a complete stop**.

Always wait until the rotor has come to a stop without braking. The brake does not work when there is no power. The braking process lasts much longer than usual.

Proceed as follows:

1. **Wait until the rotor has stopped**. This can take several minutes. Use the view port for visual confirmation.
2. Pull out the power supply plug.
3. Insert a 3 inch long wire (e.g. a staple) into the hole above the control panel.
4. Press the centrifuge door down gently. Push the wire further into the hole until you hear and feel the door latch unlocking.
5. Remove the wire from the hole and open the centrifuge lid.

   The samples can be removed.

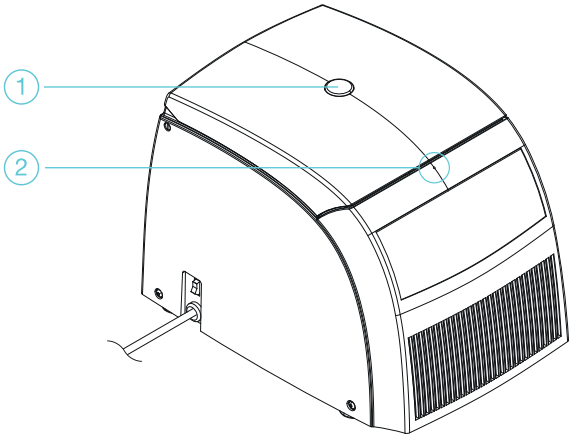

① View port; ② Emergency lid release

Figure 8: Emergency Lid Release

6. Reconnect the centrifuge once the power has been restored.
7. Switch on the centrifuge.

WARNING Serious injuries can occur if you touch a spinning rotor with your hands or tools. A rotor can still be spinning after a power failure occurs. Do not open the centrifuge before the rotor has stopped spinning. Do not touch a spinning rotor. Never use your hands or tools to stop a spinning rotor.

5. 2. Ice Formation

Warm humid air in combination with a cold centrifugation chamber can lead to formation of ice. To remove the ice from the centrifugation chamber, proceed as follows:

1. Open the centrifuge lid.
2. Remove the rotor. [→ 🗎 48]
3. Let the ice melt.

   NOTICE Do not use any sharp tools, aggressive liquids or fire to fasten the melting process. If necessary use warm water to speed up the melting process.
4. Remove the water from the centrifugation chamber.

5. 3. Troubleshooting by Guide

NOTICE If an error message shows that is not listed in this table, a service technician must be contacted.

Error	Description	Solutions
Display remains dark.	The drive stops. The centrifuge runs down without being braked. The centrifuge lid cannot be opened.	No mains connection. Is the centrifuge turned on? Check the mains connection. If the error message still shows, contact a service technician.
Display fails briefly.	The drive stops. The centrifuge runs down without being braked.	Mains connection interrupted for some seconds, • Turn off mains switch. • Check whether the mains power cord is connected properly • Restart the centrifuge.

Error	Description	Solutions
The centrifuge lid cannot be opened.	Pressing **OPEN** has no effect.	Centrifuge lid is not correctly engaged or warped. • Check if mains connection is working and the instrument is switched on (display is lit). • If this is unsuccessful, you may open the centrifuge lid using the mechanical emergency lid release. [→ 🗎 72]
	Exceptionally running noise.	Imbalance • Stop the centrifuge. Press **STOP** or unplug mains power cord. • Wait until the centrifuge comes to a complete stop. • Check whether the rotor is properly loaded. • Check whether a broken tube, damage to the rotor or motor is responsible for the run noise. If the error message still shows, contact a service technician.
Display **oP** appears although lid is closed.	Centrifuge does not start.	Centrifuge lid not properly closed. Open the centrifuge lid and repeat locking procedure. If the error message still shows, contact a service technician.
Lid	Rotor stops with deceleration to standstill.	Centrifuge lid was opened manually during the run. Close centrifuge lid immediately Rotor stops with deceleration to standstill. For further centrifugation, you have to switch the instrument off and switch it on again.
E-01 - E-13	Rotor stops with deceleration to standstill. The centrifuge cannot be operated.	Internal program error Switch the instrument off and on again. If the error message still shows, contact a service technician.
E-14	Rotor stops with deceleration to standstill. The centrifuge cannot be operated.	Overtemperature in the centrifuge chamber. Switch the centrifuge off and turn it on again after approx. one minute. If the error message still shows, contact a service technician.
E-15 - E-16	Rotor stops with deceleration to standstill. The centrifuge cannot be operated.	Temperature measurement error. Switch the instrument off and on again. If the error message still shows, contact a service technician.

Error	Description	Solutions
E-22 - E-23	Rotor stops with deceleration to standstill. The centrifuge cannot be operated.	Error in speed entry. Switch the instrument off and on again. The display shows **BR** and a countdown from **100 - 0**. If the error message still shows, contact a service technician.
E-24	The centrifuge cannot be operated.	Wrong status information from the lid latch. • Switch the instrument off and on again. • After re-switching on, the display shows **Lid FAiL**. • If the centrifuge lid has been already opened, the display shows **CLOSE Lid**. Close the lid. • The centrifuge tries to open the lid to switch for starting the normal operation mode. If the error message still shows, contact a service technician.
E-27	Centrifuge door is not closed.	Lock the centrifuge door with pressure. Switch the centrifuge off and on again. If the error message still shows, contact a service technician.
E-29	Motor does not start	Motor or rotor blocked • Switch instrument off and on again using the mains switch. • Open the centrifuge lid. • Check whether the rotor can turn freely. If the error message still shows, contact a service technician.
E-31	Rotor stops without deceleration to standstill or does not start.	Overtemperature in the motor • Turn instrument off and unplug mains power cord. • Check and clean the venting slots if necessary and respectively the filter unit of the cooled centrifuge. • After approx. 60 minutes you can restart the instrument. Observe the maximum permissible environmental temperature. If the error message still shows, contact a service technician.
E-33	Rotor stops with deceleration to standstill.	Overpressure in the refrigeration system • Turn instrument off and unplug mains power cord. • Check and clean the venting slots if necessary and respectively the filter unit of the cooled centrifuge. • After approx. 60 minutes you can restart the instrument. Observe the maximum permissible environmental temperature. If the error message still shows, contact a service technician.
E-36	Rotor stops with deceleration to standstill. The centrifuge cannot be operated.	Overcurrent or error in current measurement Switch the instrument off and on again. If the error message still shows, contact a service technician.

Error	Description	Solutions
E-41 - E-56	Rotor stops with deceleration to standstill. The centrifuge cannot be operated.	Internal program error Switch the instrument off and on again. If the error message still shows, contact a service technician.
E-60	Rotor stops with deceleration.	Insufficient temperature in the refrigeration unit. • Stop the centrifugation run. • Open the centrifuge lid and defrost the chamber. Never touch the chamber directly with your hands – you may freeze up. • After approx. 60 minutes you can restart the instrument. Observe the maximum permissible ambient temperature • If a strong ice sheet is present in the internal chamber, be sure to remove all condensate after defrosting. If the error message still shows, contact a service technician.

Table 38: Troubleshooting

5. 3. 1. Information for the Customer Service

If you need to contact customer service, please provide the order no. and the serial no. of your device.

This information can be found on the back near the inlet for the power supply cable.

To identify the software version:

Keep **STOP** pushed when switching on the centrifuge. In the display all segments will be lit.

Subsequently, the following entries will be displayed for 5 seconds each:

Software number	SOFT	063	3_
Software version		_02	
NV-RAM number	EEPRO	558	3_
NV-RAM version		_01	
Cycle counter	CYCLE	001	25

This translates into the following information:

» Software 0633 Version 02
» NV-RAM 5583 Version 01
» Cycles completed 125

NOTICE The values shown above are just examples.

6. Chemical Compatibility

Chemical Compatibility

CHEMICAL / MATERIAL	Aluminium	Anodic Coating for Aluminum	Buna N	Cellulose Acetate Butyrate	Polyurethane Rotor Paint	Composite Carbon Fiber/Epoxy	Delrin™	EPDM rubber	Glass	Neoprene	Noryl™	Nylon	PET[1], Polyclear™,Clear Crimp™	Polyallomer	Polycarbonate	Polyester, Glass Thermoset	Polythermide	Polyethylene	Polypropylene	Polysulfone	Polyvynil Chloride	Rulon A™, Teflon™	Silicone Rubber	Stainless Steel	Titanium	Tygon™	Viton™
2-mercaptoethanol	S	S	U	/	S	M	S	/	S	U	S	S	U	S	S	/	S	S	S	S	U	S	S	S	S	S	S
Acetaldehyde	S	/	U	U	/	/	/	M	/	U	/	/	/	M	U	U	U	M	M	/	M	S	U	/	S	/	U
Acetone	M	S	U	U	S	U	M	S	S	U	U	S	U	S	U	U	U	S	S	U	U	S	M	M	S	U	U
Acetonitrile	S	S	U	/	S	M	S	/	S	S	U	S	U	M	U	U	/	S	M	U	U	S	S	S	S	U	U
Alconox™	U	U	S	/	S	S	S	/	S	S	S	S	S	S	M	S	S	S	S	S	S	S	S	S	S	S	U
Allyl Alcohol	/	/	/	U	/	/	S	/	/	/	/	S	/	S	S	M	S	S	S	/	M	S	/	/	S	/	/
Aluminum Chloride	U	U	S	S	S	S	U	S	S	S	S	M	S	S	S	S	/	S	S	S	S	S	M	U	U	S	S

S	Satisfactory
M	Moderate attack, may be satisfactory for use in centrifuge depending on length of exposure, speed involved, etc.; suggest testing under actual conditions of use
U	Unsatisfactory, not recommended
/	Performance unknown; suggest testing, using sample to avoid loss of valuable material

Chemical Compatibility

MATERIAL / CHEMICAL	Aluminium	Anodic Coating for Aluminum	Buna N	Cellulose Acetate Butyrate	Polyurethane Rotor Paint	Composite Carbon Fiber/Epoxy	Delrin™	EPDM rubber	Glass	Neoprene	Noryl™	Nylon	PET[1], Polyclear™,Clear Crimp™	Polyallomer	Polycarbonate	Polyester, Glass Thermoset	Polythermide	Polyethylene	Polypropylene	Polysulfone	Polyvynil Chloride	Rulon A™, Teflon™	Silicone Rubber	Stainless Steel	Titanium	Tygon™	Viton™
Formic Acid (100%)	/	S	M	U	/	/	U	/	/	/	/	U	/	S	M	U	U	S	S	/	U	S	/	U	S	/	U
Ammonium Acetate	S	S	U	/	S	S	S	/	S	S	S	S	S	S	S	U	/	S	S	S	S	S	S	S	S	S	S
Ammonium Carbonate	M	S	U	S	S	S	S	S	S	S	S	S	S	S	U	U	U	S	S	S	S	S	S	M	S	S	S
Ammonium Hydroxide (10%)	U	U	S	U	S	S	M	S	S	S	S	S	/	S	U	M	S	S	S	S	S	S	S	S	S	M	S
Ammonium Hydroxide (28%)	U	U	S	U	S	U	M	S	S	S	S	S	U	S	U	M	S	S	S	S	S	S	S	S	S	M	S
Ammonium Hydroxide (conc.)	U	U	U	U	S	U	M	S	/	S	/	S	U	S	U	U	S	S	S	/	M	S	S	S	S	/	U

S	Satisfactory
M	Moderate attack, may be satisfactory for use in centrifuge depending on length of exposure, speed involved, etc.; suggest testing under actual conditions of use
U	Unsatisfactory, not recommended
/	Performance unknown; suggest testing, using sample to avoid loss of valuable material

Chemical Compatibility

CHEMICAL \ MATERIAL	Aluminium	Anodic Coating for Aluminum	Buna N	Cellulose Acetate Butyrate	Polyurethane Rotor Paint	Composite Carbon Fiber/Epoxy	Delrin™	EPDM rubber	Glass	Neoprene	Noryl™	Nylon	PET[1], Polyclear™,Clear Crimp™	Polyallomer	Polycarbonate	Polyester, Glass Thermoset	Polythermide	Polyethylene	Polypropylene	Polysulfone	Polyvynil Chloride	Rulon A™, Teflon™	Silicone Rubber	Stainless Steel	Titanium	Tygon™	Viton™
Ammonium Phosphate	U	/	S	/	S	S	S	S	S	S	S	S	/	S	S	M	/	S	S	S	S	S	S	M	S	S	S
Ammonium Sulfate	U	M	S	/	S	S	U	S	S	S	S	S	S	S	S	S	/	S	S	S	S	S	S	U	S	S	U
Amyl Alcohol	S	/	M	U	/	/	S	S	/	M	/	S	/	M	S	S	S	M	M	S	S	/	U	/	S	/	M
Aniline	S	S	U	U	S	U	S	M	S	U	U	U	U	U	U	U	/	S	M	S	U	U	S	S	S	U	S
Sodium Hydroxide (<1%)	U	/	M	S	S	S	/	/	S	M	S	S	/	S	M	M	S	M	M	S	S	S	M	S	S	/	U
Sodium Hydroxide (10%)	U	/	M	U	/	/	U	/	M	M	S	S	U	S	U	U	S	S	S	S	S	S	M	S	S	/	U
Barium Salts	M	U	S	/	S	S	S	S	S	S	S	S	S	S	S	M	/	S	S	S	S	S	S	M	S	S	S

S	Satisfactory
M	Moderate attack, may be satisfactory for use in centrifuge depending on length of exposure, speed involved, etc.; suggest testing under actual conditions of use
U	Unsatisfactory, not recommended
/	Performance unknown; suggest testing, using sample to avoid loss of valuable material

Chemical Compatibility

CHEMICAL \ MATERIAL	Aluminium	Anodic Coating for Aluminum	Buna N	Cellulose Acetate Butyrate	Polyurethane Rotor Paint	Composite Carbon Fiber/Epoxy	Delrin™	EPDM rubber	Glass	Neoprene	Noryl™	Nylon	PET[1], Polyclear™,Clear Crimp™	Polyallomer	Polycarbonate	Polyester, Glass Thermoset	Polythermide	Polyethylene	Polypropylene	Polysulfone	Polyvynil Chloride	Rulon A™, Teflon™	Silicone Rubber	Stainless Steel	Titanium	Tygon™	Viton™
Benzene	S	S	U	U	S	U	M	U	S	U	U	S	U	U	U	M	U	M	U	U	U	S	U	U	S	U	S
Benzyl Alcohol	S	/	U	U	/	/	M	M	/	M	/	S	U	U	U	U	U	U	U	/	M	S	M	/	S	/	S
Boric Acid	U	S	S	M	S	S	U	S	S	S	S	S	S	S	S	S	U	S	S	S	S	S	S	S	S	S	S
Cesium Acetate	M	/	S	/	S	S	S	S	S	S	S	S	/	S	S	/	/	S	S	S	S	S	S	M	S	S	S
Cesium Bromide	M	S	S	/	S	S	S	/	S	S	S	S	S	S	S	/	/	S	S	S	S	S	S	M	S	S	S
Cesium Chloride	M	S	S	U	S	S	S	/	S	S	S	S	S	S	S	/	/	S	S	S	S	S	S	M	S	S	S
Cesium Formate	M	S	S	/	S	S	S	/	S	S	S	S	S	S	S	/	/	S	S	S	S	S	S	M	S	S	S
Cesium Iodide	M	S	S	/	S	S	S	/	S	S	S	S	S	S	S	/	/	S	S	S	S	S	S	M	S	S	S
Cesium Sulfate	M	S	S	/	S	S	S	/	S	S	S	S	S	S	S	/	/	S	S	S	S	S	S	M	S	S	S
Chloroform	U	U	U	U	S	S	M	U	S	U	U	M	U	M	U	U	U	M	M	U	U	S	U	U	U	M	S

S	Satisfactory
M	Moderate attack, may be satisfactory for use in centrifuge depending on length of exposure, speed involved, etc.; suggest testing under actual conditions of use
U	Unsatisfactory, not recommended
/	Performance unknown; suggest testing, using sample to avoid loss of valuable material

Chemical Compatibility

CHEMICAL \ MATERIAL	Aluminium	Anodic Coating for Aluminum	Buna N	Cellulose Acetate Butyrate	Polyurethane Rotor Paint	Composite Carbon Fiber/Epoxy	Delrin™	EPDM rubber	Glass	Neoprene	Noryl™	Nylon	PET[1], Polyclear™,Clear Crimp™	Polyallomer	Polycarbonate	Polyester, Glass Thermoset	Polythermide	Polyethylene	Polypropylene	Polysulfone	Polyvynil Chloride	Rulon A™, Teflon™	Silicone Rubber	Stainless Steel	Titanium	Tygon™	Viton™
Chromic Acid (10%)	U	/	U	U	S	U	U	/	S	S	S	U	S	S	M	U	M	S	S	U	M	S	M	U	S	S	S
Chromic Acid (50%)	U	/	U	U	/	U	U	/	/	/	S	U	U	S	M	U	M	S	S	U	M	S	/	U	M	/	S
Cresol Mixture	S	S	U	/	/	/	S	/	S	U	U	U	U	U	U	/	/	U	U	/	U	S	S	S	S	U	S
Cyclohexane	S	S	S	/	S	S	S	U	S	U	S	S	U	U	U	M	S	M	U	M	M	S	U	M	M	U	S
Deoxycholate	S	S	S	/	S	S	S	/	S	S	S	S	S	S	S	/	/	S	S	S	S	S	S	S	S	S	S
Distilled Water	S	S	S	S	S	S	S	S	S	S	S	S	S	S	S	S	S	S	S	S	S	S	S	S	S	S	S
Dextran	M	S	S	S	S	S	S	/	S	S	S	S	S	S	S	S	S	S	S	S	S	S	S	M	S	S	S
Diethyl Ether	S	S	U	U	S	S	S	U	S	U	S	S	U	U	U	U	U	U	U	U	U	S	S	S	S	M	U

S	Satisfactory
M	Moderate attack, may be satisfactory for use in centrifuge depending on length of exposure, speed involved, etc.; suggest testing under actual conditions of use
U	Unsatisfactory, not recommended
/	Performance unknown; suggest testing, using sample to avoid loss of valuable material

Chemical Compatibility

CHEMICAL \ MATERIAL	Aluminium	Anodic Coating for Aluminum	Buna N	Cellulose Acetate Butyrate	Polyurethane Rotor Paint	Composite Carbon Fiber/Epoxy	Delrin™	EPDM rubber	Glass	Neoprene	Noryl™	Nylon	PET[1], Polyclear™,Clear Crimp™	Polyallomer	Polycarbonate	Polyester, Glass Thermoset	Polythermide	Polyethylene	Polypropylene	Polysulfone	Polyvynil Chloride	Rulon A™, Teflon™	Silicone Rubber	Stainless Steel	Titanium	Tygon™	Viton™
Diethyl Ketone	S	/	U	U	/	/	M	/	S	U	/	S	/	M	U	U	U	M	M	/	U	S	/	/	S	U	U
Diethylpyro-carbonate	S	S	U	/	S	S	S	/	S	S	U	S	U	S	U	/	/	S	S	S	M	S	S	S	S	S	S
Dimethylsulfoxide	S	S	U	U	S	S	S	/	S	U	S	S	U	S	U	U	/	S	S	U	U	S	S	S	S	U	U
Dioxane	M	S	U	U	S	S	M	M	S	U	U	S	U	M	U	U	/	M	M	M	U	S	S	S	S	U	U
Ferric Chloride	U	U	S	/	/	/	M	S	/	M	/	S	/	S	/	/	/	S	S	/	/	/	M	U	S	/	S
Acetic Acid (Glacial)	S	S	U	U	S	S	U	M	S	U	S	U	U	U	U	U	M	S	U	M	U	S	U	U	S	/	U
Acetic Acid (5%)	S	S	M	S	S	S	M	S	S	S	S	S	M	S	S	S	S	S	S	S	M	S	S	M	S	S	M
Acetic Acid (60%)	S	S	U	U	S	S	U	/	S	M	S	U	U	M	U	S	M	S	M	S	M	S	M	U	S	M	U

S	Satisfactory
M	Moderate attack, may be satisfactory for use in centrifuge depending on length of exposure, speed involved, etc.; suggest testing under actual conditions of use
U	Unsatisfactory, not recommended
/	Performance unknown; suggest testing, using sample to avoid loss of valuable material

Chemical Compatibility

CHEMICAL \ MATERIAL	Aluminium	Anodic Coating for Aluminum	Buna N	Cellulose Acetate Butyrate	Polyurethane Rotor Paint	Composite Carbon Fiber/Epoxy	Delrin™	EPDM rubber	Glass	Neoprene	Noryl™	Nylon	PET[1], Polyclear™,Clear Crimp™	Polyallomer	Polycarbonate	Polyester, Glass Thermoset	Polythermide	Polyethylene	Polypropylene	Polysulfone	Polyvynil Chloride	Rulon A™, Teflon™	Silicone Rubber	Stainless Steel	Titanium	Tygon™	Viton™
Ethyl Acetate	M	M	U	U	S	S	M	M	S	S	U	S	U	M	U	U	/	S	S	U	U	S	M	M	S	U	U
Ethyl Alcohol (50%)	S	S	S	S	S	S	M	S	S	S	S	S	U	S	U	S	S	S	S	S	S	S	S	M	S	M	U
Ethyl Alcohol (95%)	S	S	S	U	S	S	M	S	S	S	S	S	U	S	U	/	S	S	S	M	S	S	S	U	S	M	U
Ethylene Dichloride	S	/	U	U	/	/	S	M	/	U	U	S	U	U	U	U	U	U	U	/	U	S	U	/	S	/	S
Ethylene Glycol	S	S	S	S	S	S	S	S	S	S	S	S	/	S	U	S	S	S	S	S	S	S	S	M	S	M	S
Ethylene Oxide Vapor	S	/	U	/	/	U	/	/	S	U	/	S	/	S	M	/	/	S	S	S	U	S	U	S	S	S	U
Ficoll-Hypaque™	M	S	S	/	S	S	S	/	S	S	S	S	/	S	S	/	S	S	S	S	S	S	S	M	S	S	S

S	Satisfactory
M	Moderate attack, may be satisfactory for use in centrifuge depending on length of exposure, speed involved, etc.; suggest testing under actual conditions of use
U	Unsatisfactory, not recommended
/	Performance unknown; suggest testing, using sample to avoid loss of valuable material

Chemical Compatibility

CHEMICAL \ MATERIAL	Aluminium	Anodic Coating for Aluminum	Buna N	Cellulose Acetate Butyrate	Polyurethane Rotor Paint	Composite Carbon Fiber/Epoxy	Delrin™	EPDM rubber	Glass	Neoprene	Noryl™	Nylon	PET[1], Polyclear™,Clear Crimp™	Polyallomer	Polycarbonate	Polyester, Glass Thermoset	Polythermide	Polyethylene	Polypropylene	Polysulfone	Polyvynil Chloride	Rulon A™, Teflon™	Silicone Rubber	Stainless Steel	Titanium	Tygon™	Viton™
Hydrofluoric Acid (10%)	U	U	U	M	/	/	U	/	/	U	U	S	/	S	M	U	S	S	S	S	M	S	U	U	U	/	/
Hydrofluoric Acid (50%)	U	U	U	U	/	/	U	/	/	U	U	U	U	S	U	U	U	S	S	M	M	S	U	U	U	/	M
Hydrochloric Acid (conc.)	U	U	U	U	/	U	U	M	/	U	M	U	U	M	U	U	U	/	S	/	U	S	U	U	U	/	/
Formaldehyde (40%)	M	M	M	S	S	S	S	M	S	S	S	S	M	S	S	S	U	S	S	M	S	S	S	M	S	M	U
Glutaraldehyde	S	S	S	S	/	/	S	/	S	S	S	S	S	S	S	/	/	S	S	S	/	/	S	S	S	/	/
Glycerol	M	S	S	/	S	S	S	S	S	S	S	S	S	S	S	S	/	S	S	S	S	S	S	S	S	S	S

S	Satisfactory
M	Moderate attack, may be satisfactory for use in centrifuge depending on length of exposure, speed involved, etc.; suggest testing under actual conditions of use
U	Unsatisfactory, not recommended
/	Performance unknown; suggest testing, using sample to avoid loss of valuable material

Chemical Compatibility

MATERIAL / CHEMICAL	Aluminium	Anodic Coating for Aluminum	Buna N	Cellulose Acetate Butyrate	Polyurethane Rotor Paint	Composite Carbon Fiber/Epoxy	Delrin™	EPDM rubber	Glass	Neoprene	Noryl™	Nylon	PET[1], Polyclear™,Clear Crimp™	Polyallomer	Polycarbonate	Polyester, Glass Thermoset	Polythermide	Polyethylene	Polypropylene	Polysulfone	Polyvynil Chloride	Rulon A™, Teflon™	Silicone Rubber	Stainless Steel	Titanium	Tygon™	Viton™
Guandine Hydrochloride	U	U	S	/	S	S	S	/	S	S	S	S	S	S	S	/	/	S	S	S	S	S	S	U	S	S	S
Haemo-Sol™	S	S	S	/	/	/	S	/	S	S	S	S	S	S	S	/	/	S	S	S	S	S	S	S	S	S	S
Hexane	S	S	S	/	S	S	S	/	S	S	U	S	U	M	U	S	S	U	S	S	M	S	U	S	S	U	S
Isobutyl Alcohol	/	/	M	U	/	/	S	S	/	U	/	S	U	S	S	M	S	S	S	/	S	S	S	/	S	/	S
Isopropyl Alcohol	M	M	M	U	S	S	S	S	S	U	S	S	U	S	U	M	S	S	S	S	S	S	S	/	M	M	S
Iodoacetic Acid	S	S	M	/	S	S	S	/	S	M	S	S	M	S	S	/	M	S	S	S	S	S	M	S	S	M	M
Potassium Bromide	U	S	S	/	S	S	S	/	S	S	S	S	S	S	S	S	S	S	S	/	S	S	S	M	S	S	S
Potassium Carbonate	M	U	S	S	S	S	S	/	S	S	S	S	S	S	U	S	S	S	S	S	S	S	S	S	S	S	S

S	Satisfactory
M	Moderate attack, may be satisfactory for use in centrifuge depending on length of exposure, speed involved, etc.; suggest testing under actual conditions of use
U	Unsatisfactory, not recommended
/	Performance unknown; suggest testing, using sample to avoid loss of valuable material

Chemical Compatibility

CHEMICAL \ MATERIAL	Aluminium	Anodic Coating for Aluminum	Buna N	Cellulose Acetate Butyrate	Polyurethane Rotor Paint	Composite Carbon Fiber/Epoxy	Delrin™	EPDM rubber	Glass	Neoprene	Noryl™	Nylon	PET[1], Polyclear™,Clear Crimp™	Polyallomer	Polycarbonate	Polyester, Glass Thermoset	Polythermide	Polyethylene	Polypropylene	Polysulfone	Polyvynil Chloride	Rulon A™, Teflon™	Silicone Rubber	Stainless Steel	Titanium	Tygon™	Viton™
Potassium Chloride	U	S	S	/	S	S	S	S	S	S	S	S	S	S	S	/	S	S	S	S	S	S	S	U	S	S	S
Potassium Hydroxide (5%)	U	U	S	S	S	S	M	/	S	S	S	S	/	S	U	S	S	S	S	S	S	S	M	U	M	S	U
Potassium Hydroxide (conc.)	U	U	M	U	/	/	M	/	M	S	S	/	U	M	U	U	U	S	M	/	M	U	/	U	U	/	U
Potassium Permanganate	S	S	S	/	S	S	S	/	S	S	S	U	S	S	S	M	/	S	M	S	U	S	S	M	S	U	S
Calcium Chloride	M	U	S	S	S	S	S	S	S	S	S	S	S	S	M	S	/	S	S	S	S	S	S	M	S	S	S
Calcium Hypochlorite	M	/	U	/	S	M	M	S	/	M	/	S	/	S	M	S	/	S	S	S	M	S	M	U	S	/	S
Kerosene	S	S	S	/	S	S	S	U	S	M	U	S	U	M	M	S	/	M	M	M	S	S	U	S	S	U	S

S	Satisfactory
M	Moderate attack, may be satisfactory for use in centrifuge depending on length of exposure, speed involved, etc.; suggest testing under actual conditions of use
U	Unsatisfactory, not recommended
/	Performance unknown; suggest testing, using sample to avoid loss of valuable material

Chemical Compatibility

CHEMICAL \ MATERIAL	Aluminium	Anodic Coating for Aluminum	Buna N	Cellulose Acetate Butyrate	Polyurethane Rotor Paint	Composite Carbon Fiber/Epoxy	Delrin™	EPDM rubber	Glass	Neoprene	Noryl™	Nylon	PET[1], Polyclear™,Clear Crimp™	Polyallomer	Polycarbonate	Polyester, Glass Thermoset	Polythermide	Polyethylene	Polypropylene	Polysulfone	Polyvynil Chloride	Rulon A™, Teflon™	Silicone Rubber	Stainless Steel	Titanium	Tygon™	Viton™
Sodium Chloride (10%)	S	/	S	S	S	S	S	S	/	/	/	S	S	S	S	S	/	S	S	S	S	/	S	S	M	/	S
Sodium Chloride (sat'd)	U	/	S	U	S	S	S	/	/	/	/	S	S	S	S	S	/	S	S	/	S	/	S	S	M	/	S
Carbon Tetrachloride	U	U	M	S	S	U	M	U	S	U	U	S	U	M	U	S	S	M	M	S	M	M	M	M	U	S	S
Aqua Regia	U	/	U	U	/	/	U	/	/	/	/	/	U	U	U	U	U	U	U	/	/	/	/	/	S	/	M
Solution 555 (20%)	S	S	S	/	/	/	S	/	S	S	S	S	S	S	S	/	/	S	S	S	/	S	S	S	S	S	S
Magnesium Chloride	M	S	S	/	S	S	S	S	S	S	S	S	S	S	S	S	S	S	S	S	S	S	S	M	S	S	S

S	Satisfactory
M	Moderate attack, may be satisfactory for use in centrifuge depending on length of exposure, speed involved, etc.; suggest testing under actual conditions of use
U	Unsatisfactory, not recommended
/	Performance unknown; suggest testing, using sample to avoid loss of valuable material

Chemical Compatibility

CHEMICAL / MATERIAL	Aluminium	Anodic Coating for Aluminum	Buna N	Cellulose Acetate Butyrate	Polyurethane Rotor Paint	Composite Carbon Fiber/Epoxy	Delrin™	EPDM rubber	Glass	Neoprene	Noryl™	Nylon	PET[1], Polyclear™,Clear Crimp™	Polyallomer	Polycarbonate	Polyester, Glass Thermoset	Polythermide	Polyethylene	Polypropylene	Polysulfone	Polyvynil Chloride	Rulon A™, Teflon™	Silicone Rubber	Stainless Steel	Titanium	Tygon™	Viton™
Mercaptoacetic Acid	U	S	U	/	S	M	S	/	S	M	S	U	U	U	U	/	S	U	U	S	M	S	U	S	S	S	S
Methyl Alcohol	S	S	S	U	S	S	M	S	S	S	S	S	U	S	U	M	S	S	S	S	S	S	S	M	S	M	U
Methylene Chloride	U	U	U	U	M	S	S	U	S	U	U	S	U	U	U	U	U	M	U	U	U	S	S	M	U	S	U
Methyl Ethyl Ketone	S	S	U	U	S	S	M	S	S	U	U	S	U	S	U	U	U	S	S	U	S	S	S	S	S	U	U
Metrizamide™	M	S	S	/	S	S	S	/	S	S	S	S	/	S	S	/	/	S	S	S	S	S	S	M	S	S	S
Lactic Acid (100%)	/	/	S	/	/	/	/	/	/	M	S	U	/	S	S	S	M	S	S	S	M	S	M	S	S	/	S
Lactic Acid (20%)	/	/	S	S	/	/	/	/	/	M	S	M	/	S	S	S	S	S	S	S	M	S	M	S	S	/	S
N/Butyl Alcohol	S	/	S	U	/	/	S	/	/	S	M	/	U	S	M	S	S	S	S	M	M	S	M	/	S	/	S

S	Satisfactory
M	Moderate attack, may be satisfactory for use in centrifuge depending on length of exposure, speed involved, etc.; suggest testing under actual conditions of use
U	Unsatisfactory, not recommended
/	Performance unknown; suggest testing, using sample to avoid loss of valuable material

Chemical Compatibility

CHEMICAL \ MATERIAL	Aluminium	Anodic Coating for Aluminum	Buna N	Cellulose Acetate Butyrate	Polyurethane Rotor Paint	Composite Carbon Fiber/Epoxy	Delrin™	EPDM rubber	Glass	Neoprene	Noryl™	Nylon	PET[1], Polyclear™,Clear Crimp™	Polyallomer	Polycarbonate	Polyester, Glass Thermoset	Polythermide	Polyethylene	Polypropylene	Polysulfone	Polyvynil Chloride	Rulon A™, Teflon™	Silicone Rubber	Stainless Steel	Titanium	Tygon™	Viton™
N/Butyl Phthalate	S	S	U	/	S	S	S	/	S	U	U	S	U	U	U	M	/	U	U	S	U	S	M	M	S	U	S
N, N-Dimethylformamide	S	S	S	U	S	M	S	/	S	S	U	S	U	S	U	U	/	S	S	U	U	S	M	S	S	S	U
Sodium Borate	M	S	S	S	S	S	S	S	S	S	S	U	S	S	S	S	/	S	S	S	S	S	S	M	S	S	S
Sodium Bromide	U	S	S	/	S	S	S	/	S	S	S	S	S	S	S	S	/	S	S	S	S	S	S	S	S	S	S
Sodium Carbonate (2%)	M	U	S	S	S	S	S	S	S	S	S	S	S	S	U	S	S	S	S	S	S	S	S	S	S	S	S
Sodium Dodecyl Sulfate	S	S	S	/	S	S	S	/	S	S	S	S	S	S	S	/	S	S	S	S	S	S	S	S	S	S	S
Sodium Hypochlorite (5%)	U	U	M	S	S	M	U	S	S	M	S	S	S	M	S	S	S	S	M	S	S	S	M	U	S	M	S

S	Satisfactory
M	Moderate attack, may be satisfactory for use in centrifuge depending on length of exposure, speed involved, etc.; suggest testing under actual conditions of use
U	Unsatisfactory, not recommended
/	Performance unknown; suggest testing, using sample to avoid loss of valuable material

Chemical Compatibility

CHEMICAL \ MATERIAL	Aluminium	Anodic Coating for Aluminum	Buna N	Cellulose Acetate Butyrate	Polyurethane Rotor Paint	Composite Carbon Fiber/Epoxy	Delrin™	EPDM rubber	Glass	Neoprene	Noryl™	Nylon	PET[1], Polyclear™,Clear Crimp™	Polyallomer	Polycarbonate	Polyester, Glass Thermoset	Polythermide	Polyethylene	Polypropylene	Polysulfone	Polyvynil Chloride	Rulon A™, Teflon™	Silicone Rubber	Stainless Steel	Titanium	Tygon™	Viton™
Sodium Iodide	M	S	S	/	S	S	S	/	S	S	S	S	S	S	S	/	/	S	S	S	S	S	S	M	S	S	S
Sodium Nitrate	S	S	S	/	S	S	S	S	S	S	S	S	S	S	S	S	/	S	S	S	S	S	U	S	S	S	S
Sodium Sulfate	U	S	S	/	S	S	S	S	S	S	S	S	S	S	S	S	S	S	S	S	S	S	S	M	S	S	S
Sodium Sulfide	S	/	S	S	/	/	/	S	/	/	/	S	S	S	U	U	/	/	S	/	/	S	S	S	M	/	S
Sodium Sulfite	S	S	S	/	S	S	S	S	M	S	S	S	S	S	S	M	/	S	S	S	S	S	S	S	S	S	S
Nickel Salts	U	S	S	S	S	S	/	S	S	S	/	/	S	S	S	S	/	S	S	S	S	S	S	M	S	S	S
Oils (Petroleum)	S	S	S	/	/	/	S	U	S	S	S	S	U	U	M	S	M	U	U	S	S	S	U	S	S	S	S
Oils (Other)	S	/	S	/	/	/	S	M	S	S	S	S	U	S	S	S	S	U	S	S	S	S	/	S	S	M	S
Oleic Acid	S	/	U	S	S	S	U	U	S	U	S	S	M	S	S	S	S	S	S	S	S	S	M	U	S	M	M
Oxalic Acid	U	U	M	S	S	S	U	S	S	S	S	S	U	S	U	S	S	S	S	S	S	S	S	U	M	S	S

S	Satisfactory
M	Moderate attack, may be satisfactory for use in centrifuge depending on length of exposure, speed involved, etc.; suggest testing under actual conditions of use
U	Unsatisfactory, not recommended
/	Performance unknown; suggest testing, using sample to avoid loss of valuable material

Chemical Compatibility

CHEMICAL \ MATERIAL	Aluminium	Anodic Coating for Aluminum	Buna N	Cellulose Acetate Butyrate	Polyurethane Rotor Paint	Composite Carbon Fiber/Epoxy	Delrin™	EPDM rubber	Glass	Neoprene	Noryl™	Nylon	PET[1], Polyclear™,Clear Crimp™	Polyallomer	Polycarbonate	Polyester, Glass Thermoset	Polythermide	Polyethylene	Polypropylene	Polysulfone	Polyvynil Chloride	Rulon A™, Teflon™	Silicone Rubber	Stainless Steel	Titanium	Tygon™	Viton™
Perchloric Acid (10%)	U	/	U	/	S	U	U	/	S	M	M	/	/	M	U	M	S	M	M	/	M	S	U	/	S	/	S
Perchloric Acid (70%)	U	U	U	/	/	U	U	/	S	U	M	U	U	M	U	U	U	M	M	U	M	S	U	S	S	U	S
Phenol (5%)	U	S	U	/	S	M	M	/	S	U	M	M	U	S	U	M	S	M	S	U	U	S	U	M	M	M	S
Phenol (50%)	U	S	U	/	S	U	M	/	S	U	M	U	U	U	U	U	S	U	M	U	U	S	U	U	U	M	S
Phosphoric Acid (10%)	U	U	M	S	S	S	U	S	S	S	S	U	/	S	S	S	S	S	S	S	S	S	U	M	U	S	S
Phosphoric Acid (conc.)	U	U	M	M	/	/	U	S	/	M	S	U	U	M	M	S	S	S	M	S	M	S	U	M	U	/	S

S	Satisfactory
M	Moderate attack, may be satisfactory for use in centrifuge depending on length of exposure, speed involved, etc.; suggest testing under actual conditions of use
U	Unsatisfactory, not recommended
/	Performance unknown; suggest testing, using sample to avoid loss of valuable material

Chemical Compatibility

CHEMICAL \ MATERIAL	Aluminium	Anodic Coating for Aluminum	Buna N	Cellulose Acetate Butyrate	Polyurethane Rotor Paint	Composite Carbon Fiber/Epoxy	Delrin™	EPDM rubber	Glass	Neoprene	Noryl™	Nylon	PET[1], Polyclear™,Clear Crimp™	Polyallomer	Polycarbonate	Polyester, Glass Thermoset	Polythermide	Polyethylene	Polypropylene	Polysulfone	Polyvynil Chloride	Rulon A™, Teflon™	Silicone Rubber	Stainless Steel	Titanium	Tygon™	Viton™
Physiologic Media (Serum, Urine)	M	S	S	S	/	/	S	/	S	S	S	S	S	S	S	S	S	S	S	S	S	S	S	S	S	S	S
Picric Acid	S	S	U	/	S	M	S	S	S	M	S	U	S	S	S	U	S	U	S	S	U	S	U	M	S	M	S
Pyridine (50%)	U	S	U	U	S	U	U	/	U	S	S	U	U	M	U	U	/	U	S	M	U	S	S	U	U	U	U
Rubidium Bromide	M	S	S	/	S	S	S	/	S	S	S	S	S	S	S	/	/	S	S	S	U	S	S	M	S	S	S
Rubidium Chloride	M	S	S	/	S	S	S	/	S	S	S	S	S	S	S	/	/	S	S	S	S	S	S	M	S	S	S
Sucrose	M	S	S	/	S	S	S	S	S	S	S	S	S	S	S	S	S	S	S	S	S	S	S	S	S	S	S
Sucrose, Alkaline	M	S	S	/	S	S	S	/	S	S	S	S	S	S	U	S	S	S	S	S	S	S	S	M	S	S	S
Sulfosalicylic Acid	U	U	S	S	S	S	S	/	S	S	S	U	S	S	S	/	S	S	S	/	S	S	S	U	S	S	S
Nitric Acid (10%)	U	S	U	S	S	U	U	/	S	U	S	U	/	S	S	S	S	S	S	S	S	S	M	S	S	S	S

S	Satisfactory
M	Moderate attack, may be satisfactory for use in centrifuge depending on length of exposure, speed involved, etc.; suggest testing under actual conditions of use
U	Unsatisfactory, not recommended
/	Performance unknown; suggest testing, using sample to avoid loss of valuable material

Chemical Compatibility

MATERIAL / CHEMICAL	Aluminium	Anodic Coating for Aluminum	Buna N	Cellulose Acetate Butyrate	Polyurethane Rotor Paint	Composite Carbon Fiber/Epoxy	Delrin™	EPDM rubber	Glass	Neoprene	Noryl™	Nylon	PET[1], Polyclear™,Clear Crimp™	Polyallomer	Polycarbonate	Polyester, Glass Thermoset	Polythermide	Polyethylene	Polypropylene	Polysulfone	Polyvynil Chloride	Rulon A™, Teflon™	Silicone Rubber	Stainless Steel	Titanium	Tygon™	Viton™
Nitric Acid (50%)	U	S	U	M	S	U	U	/	S	U	S	U	U	M	M	U	M	M	M	S	S	S	U	S	S	M	S
Nitric Acid (95%)	U	/	U	U	/	U	U	/	/	U	U	U	U	M	U	U	U	U	M	U	U	S	U	S	S	/	S
Hydrochloric Acid (10%)	U	U	M	S	S	S	U	/	S	S	S	U	U	S	U	S	S	S	S	S	S	S	S	U	M	S	S
Hydrochloric Acid (50%)	U	U	U	U	S	U	U	/	S	M	S	U	U	M	U	U	S	S	S	S	M	S	M	U	U	M	M
Sulfuric Acid (10%)	M	U	U	S	S	U	U	/	S	S	M	U	S	S	S	S	S	S	S	S	S	S	U	U	U	S	S
Sulfuric Acid (50%)	M	U	U	U	S	U	U	/	S	S	M	U	U	S	U	U	M	S	S	S	S	S	U	U	U	M	S

S	Satisfactory
M	Moderate attack, may be satisfactory for use in centrifuge depending on length of exposure, speed involved, etc.; suggest testing under actual conditions of use
U	Unsatisfactory, not recommended
/	Performance unknown; suggest testing, using sample to avoid loss of valuable material

Chemical Compatibility

CHEMICAL \ MATERIAL	Aluminium	Anodic Coating for Aluminum	Buna N	Cellulose Acetate Butyrate	Polyurethane Rotor Paint	Composite Carbon Fiber/Epoxy	Delrin™	EPDM rubber	Glass	Neoprene	Noryl™	Nylon	PET[1], Polyclear™,Clear Crimp™	Polyallomer	Polycarbonate	Polyester, Glass Thermoset	Polythermide	Polyethylene	Polypropylene	Polysulfone	Polyvynil Chloride	Rulon A™, Teflon™	Silicone Rubber	Stainless Steel	Titanium	Tygon™	Viton™
Sulfuric Acid (conc.)	M	U	U	U	/	U	U	M	/	/	M	U	U	S	U	U	U	M	S	U	M	S	U	U	U	/	S
Stearic Acid	S	/	S	/	/	/	S	M	S	U	S	S	/	S	S	S	S	S	S	S	S	S	M	M	S	S	S
Tetrahydrofuran	S	S	U	U	S	U	U	M	S	U	U	S	U	U	U	/	M	U	U	U	U	S	U	S	S	U	U
Toluene	S	S	U	U	S	S	M	U	S	U	U	S	U	U	U	S	U	M	U	U	U	S	U	S	U	U	M
Trichloroacetic Acid	U	U	U	/	S	S	U	M	S	U	S	U	U	S	M	/	M	S	S	U	U	S	U	U	U	M	U
Trichloroethane	S	/	U	/	/	/	M	U	/	U	/	S	U	U	U	U	U	U	U	U	U	S	U	/	S	/	S
Trichloroethylene	/	/	U	U	/	/	/	U	/	U	/	S	U	U	U	U	U	U	U	U	U	S	U	/	U	/	S

S	Satisfactory
M	Moderate attack, may be satisfactory for use in centrifuge depending on length of exposure, speed involved, etc.; suggest testing under actual conditions of use
U	Unsatisfactory, not recommended
/	Performance unknown; suggest testing, using sample to avoid loss of valuable material

Chemical Compatibility

CHEMICAL \ MATERIAL	Aluminium	Anodic Coating for Aluminum	Buna N	Cellulose Acetate Butyrate	Polyurethane Rotor Paint	Composite Carbon Fiber/Epoxy	Delrin™	EPDM rubber	Glass	Neoprene	Noryl™	Nylon	PET[1], Polyclear™,Clear Crimp™	Polyallomer	Polycarbonate	Polyester, Glass Thermoset	Polythermide	Polyethylene	Polypropylene	Polysulfone	Polyvynil Chloride	Rulon A™, Teflon™	Silicone Rubber	Stainless Steel	Titanium	Tygon™	Viton™
Trisodium Phosphate	/	/	/	S	/	/	M	/	/	/	/	/	/	S	/	/	S	S	S	/	/	S	/	/	S	/	S
Tris Buffer (neutral pH)	U	S	S	S	S	S	S	/	S	S	S	S	S	S	M	S	U	S	S	S	S	S	S	S	S	S	S
Triton X/100™	S	S	S	/	S	S	S	/	S	S	S	S	S	S	S	S	S	S	S	S	S	S	S	S	S	S	S
Urea	S	/	U	S	S	S	S	/	/	/	/	S	S	S	M	S	S	S	S	/	S	S	S	M	S	/	S
Hydrogen Peroxide (10%)	U	U	M	S	S	U	U	/	S	S	S	U	S	S	S	M	U	S	S	S	S	S	S	M	S	U	S
Hydrogen Peroxide (3%)	S	M	S	S	S	/	S	/	S	S	S	S	S	S	S	S	M	S	S	S	S	S	S	S	S	S	S
Xylene	S	S	U	S	S	S	M	U	S	U	U	U	U	U	U	M	U	M	U	U	U	S	U	M	S	U	S

S	Satisfactory
M	Moderate attack, may be satisfactory for use in centrifuge depending on length of exposure, speed involved, etc.; suggest testing under actual conditions of use
U	Unsatisfactory, not recommended
/	Performance unknown; suggest testing, using sample to avoid loss of valuable material

Chemical Compatibility

CHEMICAL \ MATERIAL	Aluminium	Anodic Coating for Aluminum	Buna N	Cellulose Acetate Butyrate	Polyurethane Rotor Paint	Composite Carbon Fiber/Epoxy	Delrin™	EPDM rubber	Glass	Neoprene	Noryl™	Nylon	PET[1], Polyclear™,Clear Crimp™	Polyallomer	Polycarbonate	Polyester, Glass Thermoset	Polythermide	Polyethylene	Polypropylene	Polysulfone	Polyvynil Chloride	Rulon A™, Teflon™	Silicone Rubber	Stainless Steel	Titanium	Tygon™	Viton™
Zinc Chloride	U	U	S	S	S	S	U	S	S	S	S	S	S	S	S	S	S	S	S	S	S	S	S	U	S	S	S
Zinc Sulfate	U	S	S	/	S	S	S	S	S	S	S	S	S	S	S	S	S	S	S	S	S	S	S	S	S	S	S
Citric Acid (10%)	M	S	S	M	S	S	M	S	S	S	S	S	S	S	S	S	M	S	S	S	S	S	S	S	S	S	S

S	Satisfactory
M	Moderate attack, may be satisfactory for use in centrifuge depending on length of exposure, speed involved, etc.; suggest testing under actual conditions of use
U	Unsatisfactory, not recommended
/	Performance unknown; suggest testing, using sample to avoid loss of valuable material

[1] Polyethlyeneterephtalate

NOTICE Chemical resistance data is included only as a guide to product use. Because no organized chemical compatibility data exists for materials under the stress of centrifugation, when in doubt we recommend pretesting sample lots.

Index

Symbole

10 x 5 mL Rotor 31
24 x 1.5/2.0 mL Rotor 25
36 x 0.5 mL Rotor 29

A

Aerosol-tight Applications 61
Audible Alarm 45
Autoclaving 68

C

Care 64
Centrifugation 59
Chemical Compatibility 77
Cleaning 65
Cleaning Filter Unit 66
Cleaning Intervals 64
Control Panel 44

D

Decontamination 67
Directives 20
Disinfection 67
Disposal 71
Dual Row 18 x 2.0/0.5 mL Rotor 27

E

Entering Centrifugation Parameters 55

H

Hematocrit Rotor 37
How to install a rotor 47
How to Operate a Rotor 47
How to remove a rotor 48

I

Ice Formation 73
Information for the Customer Service 76
Intended Use 5
Items Supplied 39

L

List of Centrifuges 13
List of Rotors 15
Load the Rotor 51
Location 40

M

Mains Connection 43
Mains Supply 23
Maintenance 64
Maximum Loading 52
Mechanical Emergency Lid Release 72

O

Open / Close the Centrifuge Lid 46
Operation 44

P

PCR 4 x 8 Rotor 35
PCR 8 x 8 Rotor 33
Power on / off 45

R

Refrigerants 24
Rotor Specifications 25

S

Safety Instructions 8
Service 69
Shipping 70
Short-term Centrifugation 60
Signal Words and Symbols 6

Standards 20

T

Technical Data 16
Technical Specifications 13
Transport and Set Up 39
Troubleshooting 72
Troubleshooting by Guide 73

U

Unpacking 39

thermoscientific

en

Thermo Electron LED GmbH
Zweigniederlassung Osterode
Am Kalkberg
37520 Osterode am Harz
Germany

Thermo Scientific MT 17
Thermo Scientific MT 21
Thermo Scientific MTR 17
Thermo Scientific MTR 21

IVD

50174321 is the original instruction manual.

thermofisher.com

© 2026 Thermo Fisher Scientific Inc. All rights reserved.

All trademarks are the property of Thermo Fisher Scientific Inc. and its subsidiaries unless otherwise indicated. Not all products are available in all countries. Please consult your local sales representative for details.

Shown pictures within the manual are examples and may differ considering the set parameters and language.

Australia
+61 39757 4300

Austria
+43 1 801 40 0

Belgium
+32 53 73 42 41

China
+800 810 5118
or +400 650 5118

France
+33 2 2803 2180

Germany national toll free 0800 1 536 376

Germany international
+49 6184 90 6000

India
+91 22 6716 2200

Italy
+39 02 95059 552

Japan
+81 3 5826 1616

Netherlands
+31 76 579 55 55

New Zealand
+64 9 980 6700

Nordic/Baltic/CIS countries
+358 10 329 2200

Russia
+7 812 703 42 15

Spain/Portugal
+34 93 223 09 18

Switzerland
+41 44 454 12 12

UK/Ireland
+44 870 609 9203

USA/Canada
+1 866 984 3766

Other Asian Countries
+852 2885 4613

Countries not listed
+49 6184 90 6000

ThermoFisher SCIENTIFIC